泉州市致运制冷设备有限公司
QuanZhou ZHIYUN Refrigeration Equipment Co., Ltd
地址：福建省泉州市清濛开发区政泰路91号
Add: No.91, ZhengTai Road, QingMeng Development Zone, QuanZhou, FuJian Province, China
Tel: +86-595-22203096 Mob: +86-18965657856 Email: qzzy@zylq.cn
Http://www.zylq.cn

厦门市致运制冷设备有限公司
XiaMen ZHIYUN Refrigeration Equipment Co., Ltd
地址：厦门市思明区中航紫金广场A塔902-1
Add: Unit 902-1, Tower A, ZhongHangZiJin Square, SiMing Zone, XiaMen, FuJian Province, China
Tel: +86-592-2210136 Mob: +86-18950037691 Email: xmzy@zylq.cn

出口业务
Export Business
Web: www.zhiyuncool.com Mob: +86-13459556688 Email: zhiyuncool@gmail.com

—清企划 TEL:0595—22981065 13506008841

制冷工程一体化的专业服务商
Professional Service Provider of Integrated Refrigeration Engineering

致运制冷设备有限公司
ZHIYUN Refrigeration Equipment Co., Ltd

ABOUT ZHIYUN 关于致运 >>

致运制冷设备有限公司是一家集制造、贸易和工程为一体的综合性企业。公司创立于1982年，在福建省设有保温材料、制冷设备和换热设备三家生产工厂，配套销售公司及专业的工程服务团队。公司现已通过中国制冷空调行业CRAA产品认证、中国设备维修安装企业能力等级认证(C类II级)、SGS认证和ISO9001:2015质量管理体系认证。经过四十余载的不懈努力，致运现已发展成为颇具规模、声誉和影响力的专业制冷公司，产品和服务遍布全球，海外经销商网络日益壮大。我们始终秉持“以诚为本，服务至上”的经营理念，致力于为客戶提供全方位的售前咨询、售中支持及售后保障，赢得了广大用戶和合作伙伴的深厚信赖与赞誉。

致运致力于提供制冷工程所需的全系列高品质设备和辅材，广泛应用于食品、医药、化工及物流等领域。我们专业生产压缩冷凝机组、冷水机组、制冰机、蒸发器、换热器、制冷电控箱、聚氨酯冷库板和冷库门，提供非标定制和OEM服务。此外，我们代理批发各类压缩机、制冷配件和制冷工具。在制冷系统设计及工程施工方面，我们拥有专业的技术团队和丰富的项目经验，能够为客戶提供从冷库设计、设备选型、系统安装到调试的全方位服务。我们致力于为用戶提供高效、节能和环保的制冷解决方案，帮助用戶实现更大的商业价值。

ZHIYUN Refrigeration Equipment Co., Ltd. is a comprehensive enterprise that integrates manufacturing, trade, and engineering. Established in 1982, it has three production factories in Fujian Province, including insulation materials, refrigeration equipment, and heat exchange equipment, as well as a supporting sales company and a professional engineering service team. ZHIYUN has passed the China Refrigeration and Air Conditioning Industry Association CRAA Product Certification, China Equipment Maintenance and Installation Capability Level Certification (Class C, Level II), SGS Certification, and ISO9001:2015 Management System Certification. After more than 40 years of unremitting efforts, ZHIYUN has developed into a professional refrigeration company with considerable scale, reputation, and influence. Our products and services have penetrated global markets, with an expanding network of overseas dealers. We firmly uphold the business philosophy of "integrity-driven, service-oriented", and strive to provide comprehensive pre-sales consultation, in-sales support, and post-sales service to our esteemed customers and partners, earning their profound trust and accolades.

At ZHIYUN, we specialize in offering a comprehensive range of high-quality refrigeration equipment and auxiliary materials for various applications, spanning food, pharmaceutical, chemical, and logistics industries. We manufacture compressor condensing units, water chillers, ice makers, evaporators, heat exchangers, refrigeration control panels, polyurethane panels and doors, and offer non-standard customization and OEM services. In addition, we serve as a wholesale agent for a diverse array of compressors, refrigeration parts, and tools. In terms of refrigeration system design and engineering implementation, we have a professional technical team with rich project experience. We provide comprehensive services, encompassing cold room design, equipment selection, system installation, and commissioning. Our commitment is to deliver efficient, energy-saving, and environmentally friendly refrigeration solutions that empower our customers to achieve exceptional commercial value.



证书
Certificate



保温材料车间
Insulation Material Workshop



制冷设备车间
Refrigeration Equipment Workshop



换热设备车间
Heat Exchange Equipment Workshop



制冷配件仓库
Refrigeration Parts Warehouse

目录 CONTENTS

冷库	< 1-2 >	Cold Room
聚氨酯冷库板	< 3-4 >	Polyurethane Cold Room Panels
聚氨酯冷库门	< 5 >	Polyurethane Cold Room Door
制冷机组	< 6-34 >	Compressor Condensing Unit
冷水机组	< 35>	Water Chiller
电控箱	< 36-37 >	Refrigeration Electric Control Panel
铝排及铝平板	< 38 >	Aluminum Pipe and Shelf
冷风机	< 39-47 >	Cold Room Evaporator
壳管式蒸发器	< 48 >	Shell and Tube Evaporator
风冷凝器	< 49-53 >	Air Cooled Condenser
壳管式水冷凝器	< 54-55 >	Shell and Tube Water Cooled Condenser
储液器	< 56-57 >	Liquid Receiver
制冷配件	< 58-59 >	Refrigeration Parts
制冷工具	< 60 >	Refrigeration Tools

行业应用 APPLICATIONS

果蔬储存	Fruit and Vegetable Storage
肉食加工	Meat Processing
水产加工	Seafood Processing
家禽屠宰	Fowl Slaughtering
超级市场	Large Supermarket
冷链物流	Cold Chain
分配中心	Distribution Center
皮革制造	Leather Industry
化工染料	Chemical Industry
生物制药	Bio-pharmacy
科研实验	Laboratories
医疗设施	Medical Facilitie
远洋捕捞	Ocean-going Fishing
混凝土建筑	Concrete Construction Project
矿井降温	Temperature Reduction of Mine



冷库 Cold Room



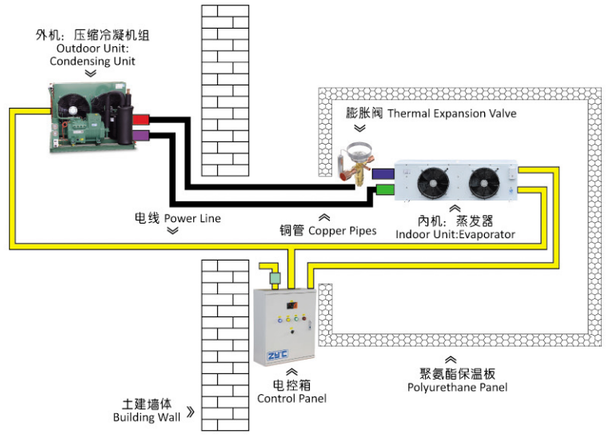

- 冷库主要用于低温存储和快速降温冷加工产品，依据库温差异，其类型主要分为冷却库、冷藏库和冻结库。它在食品加工、商超市场、医药、化学以及物流等多个行业中发挥着至关重要的作用。冷库系统由保温材料、压缩冷凝机组、蒸发器、膨胀阀、控制系统、连接管等核心组件及相关辅材组成。
- 致运公司拥有专业的技术团队和丰富的行业经验，致力于为客戶提供冷库建造的一站式服务，涵盖库体规划、系统设计、设备选型、设备供应、辅材配备、安装技术支持以及售后服务。我们根据客戶的具体需求和应用场景，量身定制节能高效的冷库解决方案，确保产品储存温度的稳定，从而保障产品品质。此外，我们还拥有丰富的特定用途冷库建造经验，如速冻库、速冻隧道、冰淇淋冷库、红酒冷库、鲜花库、菌菇库、展示冷库等，满足不同行业的特殊需求。
- Constructed from insulation materials, compressor condensing units, evaporators, expansion valves, connection pipes, and auxiliary components, a cold room is mainly designed for low-temperature storing and rapid cooling of cold-processed products. Depending on the design temperature, it can broadly be classified as a chilled room, freezer room, or quick freezer. It finds extensive application across various industries, encompassing food processing, markets, pharmaceuticals, chemicals, and logistics.
- ZHIYUN, with our expert technical team and vast project experience, offers a comprehensive ONE-STOP SOLUTION for cold room construction. This includes cold room planning, system design, model selection, supply of equipment and auxiliary materials, installation technical support, and after-sales service. Our tailored cold room solutions are highly efficient and energy-saving, ensuring stable temperatures and safeguarding product quality. Moreover, we have ample experience in catering to specific application scenarios such as quick freezers, quick-freezing tunnels, ice cream freezers, wine cellars, flower storage rooms, mushroom growth chambers, and store display cold rooms, thus fulfilling the diverse needs of various industries.

设计温度 >> DESIGN TEMPERATURE

- 冷库的设计温度由储藏产品品种和加工工艺决定。
- The design temperature of a cold room is determined by the variety of stored products and processing technology.

冷库类型 Cold Room Type	功能 Function	常见设计温度 Common Design Temperature
冷却间 Chilling Room	对产品进行冷冻加工或冷藏前，进行预先冷却 Pre-cooling prior to freezing of products	0~5℃
冻结间 Freezing Room	对产品进行冷冻加工 Freezing processing of products	-30℃~-40℃
冷却物冷藏间 Chilled Room	储存经过冷却过的产品 Storage of chilled products	0~5℃
冻结物冷藏间 Freezer Room	储存冻结加工过的产品 Storage of frozen products	-18℃~-35℃
制冰间和冰库 Ice Room	存储冰块 Storage of ice cubes	-4℃~-10℃
穿堂 Ante Room	货物进出的通道，便于装卸周转 A pathway for goods to enter and exit, designed for efficient loading and unloading cycles	≤15℃
气调保鲜库 Controlled Atmosphere Room	适当降低氧的含量和提高二氧化碳浓度，延长水果蔬菜的储藏 Appropriately reducing oxygen levels and increasing carbon dioxide concentration to extend the storage life of fruits and vegetables	0~5℃
加工车间 Processing Workshop	产品包装、分发等 Product packaging, distribution, and more	10~25℃

冷库配置 >> COLD ROOM CONFIGURATION

标配 STANDARD	选配 OPTIONAL
1. 聚氨酯冷库板和冷库门 PUR / PIR Cold Room Panels and Door 2. 压缩冷凝机组 Compressor Condensing Unit 3. 蒸发器 Evaporator 4. 电控箱 Control Panel 5. 膨胀阀 Expansional Valve 6. 连接管、电线、库灯、制冷剂、冷冻油、安装辅材 Connection Pipes, Wirings, LED Light, Refrigerant, Refrigeration Oil,and Installation Materials	1. 冷库货架 Cold Room Shelves 2. 地板防滑材料 Floor Anti-Slip Materials 3. 叉车 Forklift 4. 发电机和变压器 Generator and Transformer 5. 其他用戶需求 Other user requirements

案例展示 >> CASE PRESENTATION


果蔬 Fruit and Vegetable


鸡蛋 Egg


展示库 Display Cold Room


车间空调 Workshop Air Conditioning





冻品 / Frozen Food


冰 / Ice


搁架排管冻结间 Shelving Freezer


冷风机冻结间 Blast Freezer


速冻隧道 Quick Freezing Tunnel


移动式冷库 Mobile Cold Room

聚氨酯保温板
Polyurethane Cold Room Panels

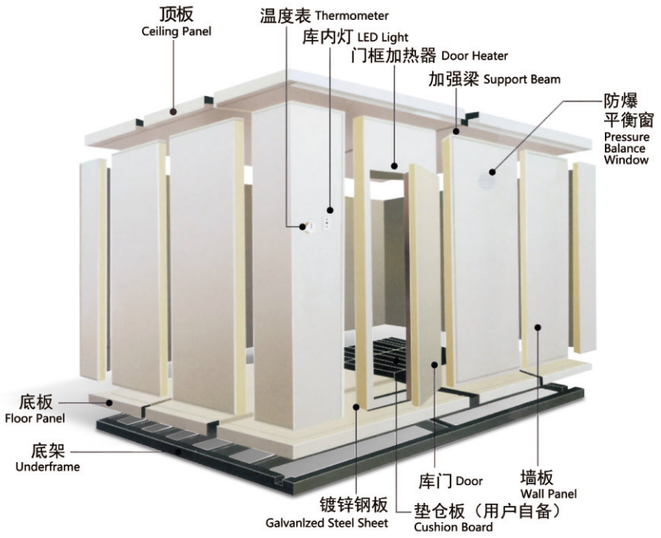

◆ 冷库保温板采用具有优异隔热性能的聚氨酯或聚异氰脲酸酯作为核心材料，外层覆盖彩钢或不锈钢板，有效减少温差带来的热传递，确保制冷系统的高效运行。凭借高度的模块化，库板可以自由组合，组装成不同尺寸的单个或多个冷库。采用凹凸槽拼接技术，显著提升接缝处的气密性，有效防止冷气泄露。同时，预埋的偏心钩简化了现场的安装流程，提高了安装效率。

◆ 致运生产多款冷库板，坚固耐用、强度出众、导热率低且隔热性能优越。根据不同的库温需求，可选择75mm至200mm不同厚度的冷库板。支持包括面板规格、发泡材料、库板尺寸、颜色等方面的非标定制。

◆ Cold room panels utilize polyurethane or polyisocyanurate as the core material due to their excellent thermal insulation properties. These panels are clad with color steel or stainless steel plates to minimize heat transfer caused by temperature differentials, ensuring the efficient operation of refrigeration systems. With a high degree of modularity, panels can be freely assembled to construct single or multiple cold rooms of varying sizes. Their concave-convex groove connection significantly improves seam airtightness, reducing cold air leakage, and pre-embedded eccentric hooks simplify the installation process on-site.

◆ ZHIYUN manufactures a comprehensive range of cold room panels, renowned for their durability, high-strength, low thermal conductivity and superior insulation capabilities. Depending on the cold room temperature requirements, clients can select from 75mm to 200mm in thickness. Our products are highly customizable, allowing for adjustments in plate specifications, foaming materials, panel dimensions, color and more.

手工带钩板 / PUR Panels with Cam-Locks



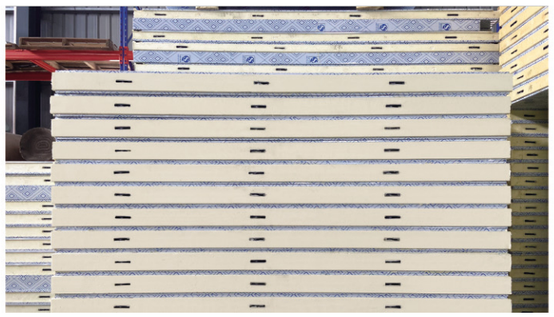

机制连续板 / PUR/PIR Panels

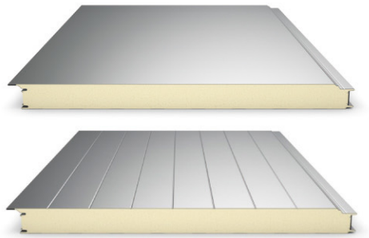

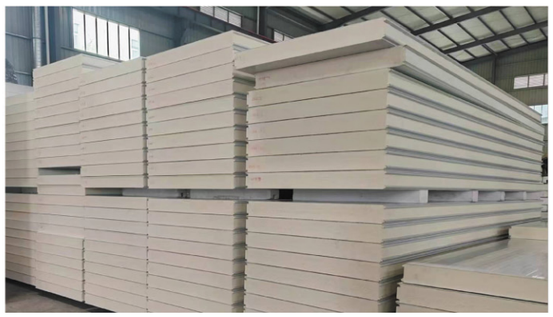

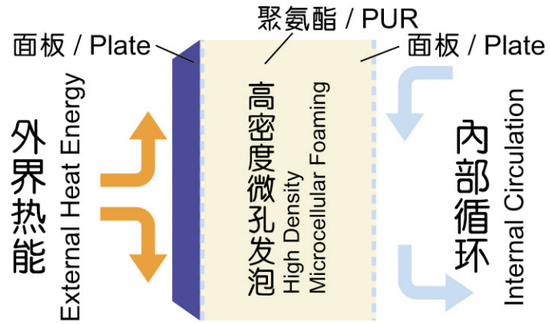


彩钢
Color Steel


不锈钢
Stainless Steel


镀锌钢板
Galvanized Steel


防滑铝板
Anti-slip Aluminum

技术参数 Technical Parameters >>

手工带钩板 **Hand Made Panels with Cam Locks**	芯材 **Core Material**	聚氨酯 PUR	
	厚度 **Thickness**	75mm / 100mm / 120mm / 150mm / 200mm	
	密度 **Density**	40~42kg/m³	
	宽度 **Width**	标准板 Standard: 950mm	
	长度 **Length**	不衔接最长10m Maximum 10m without connection	
	钩距 **Lock Distance**	900mm / 1000mm	
	防火等级 **Fire Retardant**	B2 / 常规 Standard	
	墙/顶板面板 **Wall/Roof Panel Surface Plate**	彩钢 Color Steel: 0.326mm / 0.376mm / 0.426mm / 0.476mm 不锈钢 Stainless Steel: 0.4mm / 0.5mm / 0.6mm / 0.8mm	
	底板面板 **Floor Panel Surface Plate**	镀锌钢板 Galvanized Steel: 0.4mm / 0.8mm 防滑铝板 Anti-slip Aluminum 防滑不锈钢板 Anti-slip Stainless Steel	
机制连续板 **Machine Made Panels without Hooks**	芯材 **Core Material**	聚氨酯PUR / 聚异氰脲酸酯PIR	
	厚度 **Thickness**	75mm / 100mm / 120mm / 125mm / 150mm / 180mm / 200mm / 250mm	
	密度 **Density**	PUR: 40~45kg/m³ PIR: 42~45kg/m³	
	有效宽度 **EffectiveWidth**	1120mm	
	展开宽度 **Spreading Length**	1200mm	
	防火等级 **Fire Retardant**	B1 / B2	
	外板厚度 **Exterior Plate Thickness**	方波 Square Wave	0.4~0.7mm
		浮雕 Embossed	0.5~0.6mm
		纯平 Flat	0.6~0.8mm
	内板厚度 **Interior Plate Thickness**	方波 Square Wave	0.4~0.7mm
		浮雕 Embossed	0.5~0.6mm
		纯平 Flat	0.6~0.7mm

应用范围 >>
APPLICATION

库板厚度 **Panel Thickness**	75mm	100mm	120mm	150mm	200mm
应用温度 **Applicable Temperature**	+10℃ or above	-10℃ or above	-20℃ or above	-30℃ or above	-40℃ or above

聚氨酯冷库门
Polyurethane Cold Room Door

- 冷库门门扇采用高密度、均匀分布的聚氨酯材料，保温性能卓越，有效减少损耗。面板材料可选彩钢或不锈钢，坚固耐用，外表美观。门框采用坚固的铝合金型材，保证结构强度和稳定性。冷库门设计轻巧，开关简单，操作安全，为日常使用和维护带来极大便利。采用浮沉设计，关门时门的重量自然施压在铝合金框架上，实现紧密贴合，有效防止冷气外泄。橡胶密封条的应用进一步增强了门的密封性能，确保冷库内部的温度恒定。配备门框加热丝和平衡窗，确保在低温环境中的正常开启。门内侧装有紧急逃生夜光推杆，如人员意外锁在库内，一推即开，确保人员安全。
- 致远冷库门种类齐全，包括平开门、平移门、电动平移门、气调门、快速门等多种类型，满足不同冷库的需求。可根据客戶需求定制尺寸、颜色、开启方式等。

- The cold roomdoor leaf is crafted from high-density, uniformly distributed polyurethane, boasting excellent insulation capabilities that minimize energy losses. The door plate is either color steel or stainless steel, combining robustness, durability, and aesthetic appeal. The door frame utilizes sturdy aluminum alloy profiles, guaranteeing structural integrity and stability. Its lightweight design, intuitive operation, and robust safety features offer unparalleled convenience for daily use and maintenance. The floating and sinking mechanism ensures that the door's weight naturally presses against the aluminum alloy frame upon closure, achieving a tight seal that prevents cold air leakage. Rubber sealing strips further enhance the door's sealing capabilities, maintaining a constant internal temperature within the cold room. Moreover, the door is equipped with heaters and pressure balance windows, enabling smooth operation in low-temperature environments. An emergency escape device is installed on the inner side of the door, enabling personnel to quickly evacuate the cold room in case of accidental locking.
- ZHIYUN has a diverse range of cold room doors, including hinged doors, sliding doors, electric sliding doors, controlled atmosphere doors, high speed doors, caters to the varying needs of various facilities. The customization of size and opening method are available.

平开门
HINGED DOOR

平移门
SLIDING DOOR

气调门
CONTROLLED ATMOSPHERE DOOR



快速门
HIGH SPEED DOOR



压缩冷凝机组
Compressor Condensing Unit

- 压缩冷凝机组由压缩机、冷凝器及一系列辅助制冷配件组装而成，协同蒸发器和膨胀阀组成制冷系统，为冷库及其他环境的制冷需求而设计。致远机组制冷迅速，结构紧凑，坚固耐用，且拥有卓越的能效比。我们可根据用戶的特殊要求设计制造各种非标压缩冷凝机组。
- The compression condensing unit is assembled from a compressor, condenser, and an array of auxiliary refrigeration components. Together with an evaporator and expansion valve, it creates an efficient refrigeration cycle to meet the cooling requirements of cold rooms and various other environments. ZHIYUN unit stands out for its fast refrigeration, compact structure, robust durability, and excellent energy efficiency. We can design and manufacture various non-standard compressor condensing units tailored to meet the unique needs of users.

- 制冷剂 Refrigerant: R404A, R507a, R22, R134a, etc.
- 电压 Power Supply: 3ph/380V-420V/50Hz, 3ph/460V/60Hz, 1ph/220V/50-60Hz, 3ph/380V/60Hz, 3ph/220V/50-60Hz

命名规则 >>
NAMING RULE

NJZY - 4 080 W (Y) L - ZB

- ZB：压缩机代号 / Compressor Code
- L：名义工况 / Nominal Condition
  - L: 低温 / Low Temp.（-46 ~ -13℃）
  - M: 中温 / Medium Temp.（-23 ~ 0℃）
  - H: 高温 / High Temp.（-5 ~ +12℃）
- (Y)：制冷剂 / Refrigrant
  - 缺省 / Default：R22
  - Y：R404A，R507
- W：冷凝器 / Condenser
  - A: 风冷式 / Air Cooled
  - W: 水冷式 / Water Cooled
  - E: 蒸发冷式 / Evaporative Cooling
- 080：配用电动机总功率/马力代码
  - Total Motor Power / Horsepower Code,
  - 单位 / Unit: kW / HP
- 4：压缩机数量 / Compressor Quantity
  - 缺省：1套 / Default: 1 set

机组分类 >>
UNIT CLASSIFICATION

应用工况 **Applied Working Condition**	高温 / 中温 / 低温 High Temperature / Medium Temperature / Low Temperature
冷凝方式 **Condensing Method**	风冷 / 水冷 / 蒸发冷 Air-Cooled / Water-Cooled / Evaporative Cooling
机组结构 **Unit Structure**	箱式 / 开放式 Box Type / Open Type
压缩机类型 **Compressor Type**	涡旋式 / 半封闭活塞式/螺杆式 Scroll Unit / Semi-Hermetic Reciprocating Unit / Screw Unit
压缩机数量 **Compressor QTY**	单机 / 并联 Single / Parallel

◆ 风冷机组采用空气冷却方式，结构简单，易于安装，设备投资成本相对较低。
◆ 水冷机组采用冷却水冷却方式，需配备冷却塔、水泵和循环管路。水的换热效率高于空气，机组能耗降低。
◆ 蒸发冷机组采用蒸发冷却方式，充分利用水的潜热，降低冷凝温度，进而减少机组能耗和提升能效比。

◆ Air cooled system has less components and does not require a pipe system for carrying the air, simplifying installation and operation, and reducing investment costs.
◆ Water cooled system has lower power consumption, and high thermal conductivity of water favors high heat transfer capacity. It requires the cooling tower, water pump and a pipe system.
◆ Evaporative cooling system benefits from the high latent heat of evaporation, effectively lowering the condensation temperature. This reduction translates into decreased energy consumption and an improved energy efficiency ratio for the unit.

风冷式 >>
AIR COOLED



水冷式 >>
WATER COOLED



蒸发冷式 >>
Evaporative Cooling



开放式机组
Open Type Unit

◆ 易于操作：开放式结构使得所有部件均易于触及，便于调试和维护。
◆ 冷凝器可单独安装，并在现场与压缩机连接，特别适用于设备平台空间有限或大型成套设备无法进行集装箱运输的场合。

◆ EASY HANDLING: Open structure, all components are easily accessible for commissioning and maintenance.
◆ Condenser could be installed separately and connected to its compressor unit at site, generally applicable to situations where the machine platform is limited or the completed set is too large for container shipment.



开放式 / Open Type

箱式机组
Box Type Unit

◆ 一体化设计：
压缩机、冷凝器和其他部件均安装在机组箱内，不易损坏，适合户外放置。
◆ 电控箱可安装在机组箱内，出厂前完成压缩机接线，简化现场安装工作。
◆ 冷凝器有U型和V型两种结构可选，管排少，迎风面大，换热效率高。
◆ 设计紧凑，结构合理。外壳采用镀锌钢板，颜色可选；机组箱可选择上下结构双层设计，操作空间大；机箱盖采用铰链结构，检修方便。



箱式 / Box Type

◆ ALL-IN-ONE DESIGN:
Compressor, condenser, and other refrigeration parts are integrated inside the unit box, ensuring durability and making it ideal for outdoor use.
◆ For added convenience, pre-wired control panel could be installed inside the unit box, significantly simplifying on-site installation procedures.
◆ The condenser comes in two designs: U-shaped and V-shaped, with fewer tube rows and expanded windward surface to enhance heat transfer efficiency.
◆ Compact design and reasonable structure. The shell is made of galvanized steel plate in various colors. The unit box can be configured in a double-layer, upper and lower design, maximizing operational space. The chassis cover adopts a hinge structure for ease of maintenance.

壁挂式压缩冷凝机组
Wall-Mounted Type Compressor Condensing Unit

设计优势 >>
DESIGN BENEFIT

◆高可靠性，高能效比，宽运行范围，可满足多种应用需求。
◆涡旋压缩机体积小，可使机组设计紧凑；单台压缩机冷量增大，使制冷系统重量减轻，体积缩小。
◆空调式侧出风风冷凝器，采用由专业空调制造商生产的加厚高强度外壳，可根据需求装配单风机或双风机。
◆加大风冷凝器换热面积，选用亲水膜涂层翅片和内螺纹铜管，保持系统清洁，提高换热效率和耐腐蚀性。
◆安装连接简单，可手动关闭开启截止阀；所有管路均布置于同一侧，容易连接供液管和吸气管。
◆壁挂式安装，节约安装空间。
◆更低的噪音和振动水平，可安装在居民区。
◆机组能耗低，有效降低运行成本，助力提升产出效益。

◆High reliability and energy efficiency, wide operating envelopes, and solutions for a variety of refrigeration needs.
◆The compact size of scroll compressors facilitates the slim profile of unit. Weight and dimensions of condensing unit is reduced with increased capacity per compressor, lower installation costs.
◆The air-cooled condenser, designed in a sideward-blowing air conditioner style, is equipped with one or two fans. The thickened shell, crafted by a professional air conditioner manufacturer, ensures superior strength.
◆The heat exchange area of the air condenser has been enlarged, incorporating hydrophilic film-coated fins and inner spiral copper pipes for a cleaner system, enhanced heat exchange efficiency, and improved corrosion resistance.
◆Ready-to-use connections with shut-off valve to manually close and open; Liquid and suction line easily accessible as all pipes on one side.
◆Wall-mounted installation, saving insulation space.
◆Engineered to produce lower sound, vibration and pulsation, suitable for residential areas.
◆Significantly reduced energy consumption translates to lower operational costs and maximized profitability.





设计温度 >> DESIGN TEMPERATURE

型号 / Models	蒸发温度 / Evaporation Temperature	常见应用 / Common Applications
中高温系列MiB Medium to High Temperature	-20℃ ~ +10℃	蔬果冷藏、食品加工、穿堂 Fruit and Vegetable Storage, Food Processing, Ante Room
中低温系列MiS Medium to Low Temperature	-30℃ ~ 0℃	肉类海鲜冻品冷藏 Storage of Meat, Seafood and Frozen Food
低温系列MiF Low Temperature	-40℃ ~ 0℃	肉类海鲜冻品冷藏、冰库、速冻 Storage of Meat, Seafood and Frozen Food, Ice Storage, Quick Freezing

技术参数 Technical Parameters >>

MiB中高温系列 / Medium to High Temperature Series

电压 / Voltage	220V 50Hz 1Ph / 380V 50Hz 3Ph			380V 50Hz 3Ph			
型号 / Model NJZY-	002AYM-ZB	003AYM-ZB	003AYM-ZB	004AYM-ZB	005AYM-ZB	006AYM-ZB	007AYM-ZB
压缩机 / Compressor	ZB15KQE	ZB21KQE	ZB26KQE	ZB29KQE	ZB38KQE	ZB45KQE	ZB48KQE
名义功率 / Nominal Power	2HP	3HP	3.5HP	4HP	5HP	6HP	7HP
启动电流 / LRA (A)	58/26	82/40	97/46	114/50	65.5	74	101
最大持续运行电流 / MCC (A)	16/6.0	23/8.0	24/10.0	27/11.0	13.5	16.1	17
制冷量 / Ref. Capacity (kW)	3.75/3.58	5.55/5.44	5.93/6.35	7.32/7.37	9.30	10.90	12.00
输入功率 / Power (kW)	1.70/1.89	2.71/2.62	3.33/3.07	3.29/3.48	4.39	4.97	5.47
风机功率 / Fan Motor	60W	60W	60W	60W	60Wx2	60Wx2	85Wx2
储液器 / Liquid Receiver	3L	3L	3L	3L	6L	8L	10L
回气管 / Suction Pipe	5/8"				3/4"		
液管 / Liquid Pipe	3/8"						
蒸发温度 Evaporation Temperature: -7℃; 冷凝温度 Condensing Temperature: 47℃; 冷媒 Refrigerant: R404A; 冷冻油 Refrigeration Oil: POE							

电压 / Voltage	220V 60Hz 1Ph / 220V 60Hz 3Ph				220V 60Hz 3Ph		
型号 / Model NJZY-	002AYM-YM	003AYM-YM	003AYM-YM	004AYM-YM	005AYM-YM	006AYM-YM	007AYM-YM
压缩机 / Compressor	YM34E	YM43E	YM49E	YM70E	YM86E	YM102E	YM115E
名义功率 / Nominal Power	2HP	2.5HP	3HP	4HP	5HP	6HP	7HP
启动电流 / LRA (A)	76/99	76/99	76/99	140/136	136	167	180
最大持续运行电流 / MOC (A)	19.5/10.8	20.7/13.3	21.8/14.3	34/21.8	25.2	29.4	32
制冷量 / Ref. Capacity (kW)	4.06	4.85	5.53	7.90	9.71	11.51	12.75
输入功率 / Power (kW)	2.48/2.44	2.90/2.76	3.23/3.06	4.30/4.25	5.10	6.05	6.95
风机功率 / Fan Motor	60W	60W	60W	60W	60Wx2	60Wx2	85Wx2
储液器 / Liquid Receiver	3L	3L	3L	3L	6L	8L	10L
回气管 / Suction Pipe	5/8"				3/4"		
液管 / Liquid Pipe	3/8"						
蒸发温度 Evaporation Temperature: -10℃; 冷凝温度 Condensing Temperature: 50℃; 冷媒 Refrigerant: R404A; 冷冻油 Refrigeration Oil: POE							

MiS中低温系列 / Medium to Low Temperature Series

电压 / Voltage	220V 50Hz 1Ph / 380V 50Hz 3Ph			380V 50Hz 3Ph				
型号 / Model NJZY-	002AYL-ZSI	002AYL-ZSI	003AYL-ZSI	003AYL-ZSI	004AYL-ZSI	005AYL-ZSI	006AYL-ZSI	007AYL-ZSI
压缩机 / Compressor	ZSI06KQE	ZSI08KQE	ZSI11KQE	ZSI09KQE	ZSI14KQE	ZSI15KQE	ZSI18KQE	ZSI21KQE
	喷液带CoreSense模块 Liquid Injection with CoreSense Module							
名义功率 / Nominal Power	2HP	2.5HP	3.5HP	3HP	4HP	5HP	6HP	7.5HP
堵转电流 / LRA (A)	51.2/34.8	63.9/34.8	128/47.0	34.8	47	47	67	90.5
最大运行电流 / MOC (A)	13.6/5.7	15.6/6.1	19/7.5	6.7	9.2	11.9	13.2	14.6
制冷量 / Ref. Capacity (kW)	2.12/1.98	2.51/2.46	3.59/3.56	2.75	4.44	5.16	6.24	6.96
输入功率 / Power (kW)	1.82/1.80	2.20/2.02	2.95/2.73	2.32	3.31	3.64	4.50	4.98
风机功率 / Fan Motor	60W	60W	60W	60W	60W	60Wx2	60Wx2	85Wx2
储液器 / Liquid Receiver	4L			10L				12L
回气管 / Suction Pipe	3/8"	3/8"	7/8"	3/4"	7/8"	7/8"	7/8"	7/8"
液管 / Liquid Pipe	3/8"							
蒸发温度 Evaporation Temperature: -23℃; 冷凝温度 Condensing Temperature: 47℃; 冷媒 Refrigerant: R404A; 冷冻油 Refrigeration Oil: POE								

MiF低温系列 / Low Temperature Series

电压 / Voltage	380V 50Hz 3Ph								
型号 / Model NJZY-	002AYL-ZF	003AYL-ZF	004AYL-ZF	005AYL-ZF	006AYL-ZF	004AYL-ZFI	006AYL-ZFI	008AYL-ZFI	010AYL-ZFI
压缩机 / Compressor	ZF06KQE	ZF09KQE	ZF13KQE	ZF15KQE	ZF18KQE	ZFI20KQE	ZFI26KQE	ZFI36KQE	ZFI39KQE
	喷液带喷液阀 Liquid Injection with DTC Valve					喷气增焓和过冷器 Vapor Injection with Subcooler			
名义功率 / Nominal Power	2HP	3HP	4HP	5HP	6HP	4HP	6HP	8HP	10HP
堵转电流 / LRA (A)	26	40	51.5	64	74	64	74	102	121.4
最大运行电流 / MOC (A)	5	6	8	10	12.5	9	13.7	16	18.1
制冷量 / Ref. Capacity (kW)	2.12	2.88	4.16	5.10	6.13	6.22	9.04	11.35	13.05
输入功率 / Power (kW)	1.82	2.12	2.89	3.59	4.18	3.45	5.23	6.35	7.71
风机功率 / Fan Motor	60W	60W	60W	60Wx2	60Wx2	60Wx2	60Wx2	85Wx2	85Wx2
储液器 / Liquid Receiver	3L	3L	3L	6L	8L	10L			
回气管 / Suction Pipe	5/8"			3/4"			7/8"		
液管 / Liquid Pipe	3/8"					1/2"			
蒸发温度 Evaporation Temperature: -23℃; 冷凝温度 Condensing Temperature: 47℃; 冷媒 Refrigerant: R404A; 冷冻油 Refrigeration Oil: POE									

电压 / Voltage	220V 60Hz 1Ph / 220V 60Hz 3Ph				220V 60Hz 3Ph	
型号 / Model NJZY-	002AYL-YF	003AYL-YF	003AYL-YF	004AYL-YF	005AYL-YF	006AYL-YF
压缩机 / Compressor	YF13E	YF17E	YF20E	YF29E	YF35E	YF41E
	喷液带喷液阀 Liquid Injection with DTC Valve					
名义功率 / Nominal Power	2HP	2.5HP	3HP	4HP	5HP	6HP
堵转电流 / LRA (A)	76/99	76/99	76/99	109/136	140/136	136
最大运行电流 / MOC (A)	16.1/9.3	17.0/11.1	19.4/12.1	28.0/18.4	21.5	25.2
制冷量 / Ref. Capacity (kW)	2.24	2.67	2.94	4.43	5.34	6.40
输入功率 / Power (kW)	2.14/2.10	2.62/2.49	2.77/2.67	3.91/3.83	4.53	5.27
风机功率 / Fan Motor	60W	60W	60W	60W	60W	60Wx2
储液器 / Liquid Receiver	4L				10L	
回气管 / Suction Pipe	3/8"	3/8"	7/8"	3/4"	7/8"	7/8"
液管 / Liquid Pipe	3/8"					
蒸发温度 Evaporation Temperature: -25℃; 冷凝温度 Condensing Temperature: 50℃; 冷媒 Refrigerant: R404A; 冷冻油 Refrigeration Oil: POE						

尺寸参数 Dimension Parameters >>

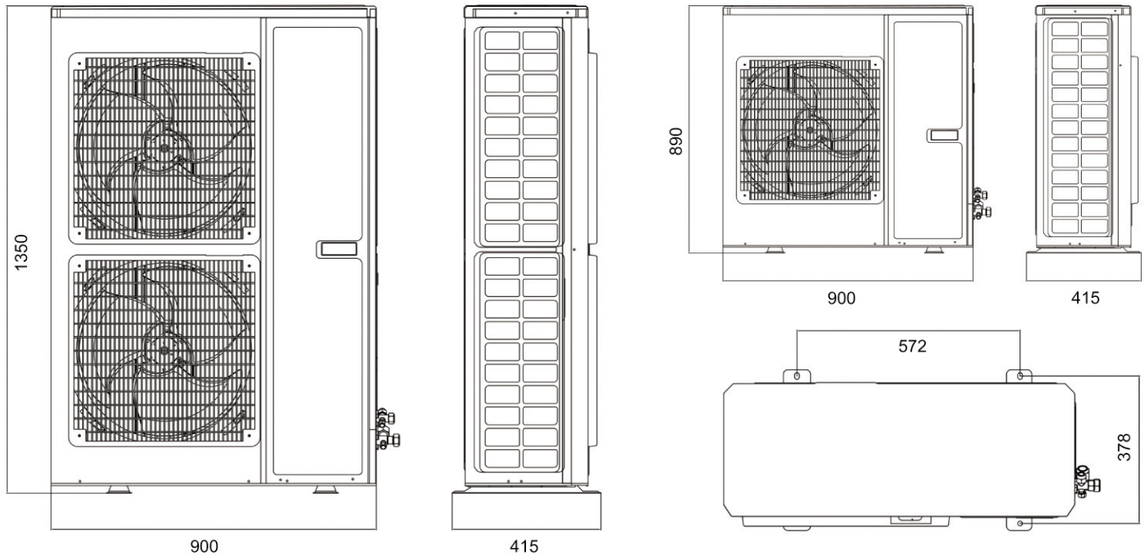

机组配置 Unit Configuration >>

		MiB	MiS	MiF
标配 **Standard**	涡旋压缩机 Scroll Compressor 壁挂式风冷凝器 Wall Mounted Type Air Cooled Condenser 储液器 Liquid Receiver			
	CoreSense 控制模块 Control Module	×	√	√
	电子膨胀阀 Electronic Expansion Valve	×	√	√
	排气温度传感器 DischargeTemperature Sensor	×	√	√
	喷气进口温度传感器 Vapor-in Temperature Sensor	×	×	√
	喷气出口温度传感器 Vapor-out Temperature Sensor	×	×	√
	喷液阀 DTC Valve	×	×	√
	过冷器 Subcooler	×	×	√
	截止阀 Shut-off Valve 供液管侧电磁阀和干燥过滤器 Solenoid Valve and Filter Drier in Liquid Line 完整管路：排气管、液管、吸气管（带保温）Complete Piping: Discharge Line, Liquid Line and Suction Line (Insulated) 压力表、压力控制器 Pressure Gauges, Pressure Controller 高低压保护、压缩机过载保护 High and low-pressure protection, compressor overload protection 出厂前压力测试和检漏 Pressure testing and leak detection before leaving the factory			
选配 **Optional**	视液镜 Sight Glass 风扇变速控制 Fan Speed Control 低温应用加热器 Heaters for Low Ambient Temperature 消音棉 Soundproof Cotton			

ZYB系列中高温涡旋式压缩冷凝机组
ZYB Medium to High Temperature Scroll Compressor Condensing Unit

◆蒸发温度范围(EVAPORATION TEMPERATURE RANGE):
-12℃～+10℃(R22) -20℃～+5℃(R404a)

◆产品系列：单机2-30HP，可并联应用

◆Product Range: Single application from 2HP to 30HP, and parallel application is available.

应用范围 >>
APPLICATION

◆果蔬冷藏、乳制品冷藏、药品冷藏、冷却间、冷却物冷藏间、商超展示柜、穿堂、加工

◆Cold Storage of Fruit, Vegetable, Dairy and Medicines, Chilling Room, Chilled Room, Display Cabinet in Store and Supermarket, Ante Room, Processing Cooling



设计优势 >> DESIGN BENEFIT

- ◆高可靠性，压缩机采用双柔性设计，对液体和杂质的容忍度更高，延长使用寿命。
- ◆高能效比，容积效率高，节能效果显著。
- ◆冷凝机组配置齐全，如电磁阀、过滤干燥器、视液镜等，均根据用戶实际需求精心选型，确保卓越的制冷性能。
- ◆加大冷凝器，加大冷凝面积，大幅提升换热效率。
- ◆紧凑型设计，重量轻，体积小。
- ◆更低的噪音和振动水平。
- ◆安装简便，有效降低安装成本。

- ◆Robust and reliable, compressor dual compliance design, better handing of liquid and debris, longer service life.
- ◆High efficiency, no constant degradation of performance with time due to wear out.
- ◆Condensing unit comes with full scope of supply (solenoid valve, filter drier, sight glass etc.), and all the parts are precisely selected based on user needs to ensure refrigeration performance.
- ◆Optimized condenser design with large condensing area, significantly improved heat exchange rate.
- ◆Advantage of light weight and compactness with small footprint, beneficial for end-users.
- ◆Lower sound, vibration and pulsation.
- ◆Simple installation, lower installation cost.

技术参数 Technical Parameters >>

中温系列 / Medium Temperature Series

	电压 / **Voltage**	220V 50Hz 1Ph / 380V 50Hz 3Ph		380V 50Hz 3Ph					
	名义功率 / **Nominal Power**	3HP	4HP	5HP	6HP	7HP	8HP	9HP	10HP
风冷 **Air Cooled**	型号 / **Model** **NJZY-**	003AYM-ZB	004AYM-ZB	005AYM-ZB	006AYM-ZB	007AYM-ZB	008AYM-ZB	009AYM-ZB	010AYM-ZB
	制冷量 / **Ref. Capacity (kW)**	5.55/5.44	7.32/7.37	9.30	10.90	12.00	14.45	16.25	19.30
	输入功率 / **Power (kW)**	2.71/2.62	3.29/3.48	4.39	4.97	5.47	6.62	7.39	8.62
	开放式风冷凝器 / **Open Type Air Condenser**	FNH-33m² 2x120W	FNH-33m² 2x120W	FNH-41m² 2x180W	FNH-49m² 2x180W	FNH-49m² 2x180W	FNH-60m² 2x180W	FNH-70m² 4x120W	FNH-80m² 4x180W
	箱式风冷凝器 / **Box Type Air Condenser**			FNU-55m² 180W	FNU-55m² 180W	FNU-55m² 180W	FNU-70m² 2x180W	FNU-80m² 2x250W	FNU-100m² 2x250W
	储液器 / **Liquid Receiver**	6L	6L	6L	8L	8L	14L	14L	14L
	蒸发温度Evaporation Temperature:-7℃; 冷凝温度Condensing Temperature:47℃; 冷媒 Refrigerant:R404A; 冷冻油 Refrigeration Oil:POE								
水冷 **Water Cooled**	型号 / **Model** **NJZY-**	003WYM-ZB	004WYM-ZB	005WYM-ZB	006WYM-ZB	007WYM-ZB	008WYM-ZB	009WYM-ZB	010WYM-ZB
	制冷量 / **Ref. Capacity (kW)**	6.28/6.15	8.27/8.34	10.50	12.30	13.55	16.30	18.30	21.70
	输入功率 / **Power (kW)**	2.30/2.23	2.87/2.95	3.73	4.22	4.64	5.70	6.37	7.45
	水冷凝器 / **Water Condenser**	5HP	5HP	5HP	8HP	8HP	10HP	10HP	15HP
	蒸发温度Evaporation Temperature:-7℃; 冷凝温度Condensing Temperature:40℃; 冷媒 Refrigerant:R404A; 冷冻油 Refrigeration Oil:POE								
	压缩机 / **Compressor**	ZB21KQE	ZB29KQE	ZB38KQE	ZB45KQE	ZB48KQE	ZB58KQE	ZB66KQE	ZB76KQE
	启动电流 / **LRA (A)**	82/40	114/50	65.5	74	101	95	111	118
	最大持续运行电流 / **MCC (A)**	23/8.0	27/11.0	13.5	16.1	17	23	24.2	26.9
	回气管 / **Suction Pipe**	3/4"	7/8"				1-1/8"	1-3/8"	
	液管 / **Liquid Pipe**	3/8"					5/8"		

ZHIYUN COOL

	电压 / **Voltage**	380V 50Hz 3Ph						
	名义功率 / **Nominal Power**	12HP	13HP	15HP	20HP	22HP	25HP	30HP
风冷 **Air Cooled**	型号 / **Model** **NJZY-**	012AYM-ZB	013AYM-ZB	015AYM-ZB	020AYM-ZB	022AYM-ZB	025AYM-ZB	030AYM-ZB
	制冷量 / **Ref. Capacity (kW)**	21.20	23.60	28.00	37.20	37.20	46.60	57.50
	输入功率 / **Power (kW)**	8.42	11.15	13.20	13.55	17.00	21.40	25.70
	开放式风冷凝器 / **Open Type Air Condenser**	FNH-120m² 4x180W	FNH-140m² 4x250W	FNH-150m² 4x250W	FNV-200m² 2x600W	FNV-240m² 2x780W	FNV-280m² 3x600W	FNV-340m² 3x780W
	箱式风冷凝器 / **Box Type Air Condenser**	FNU-120m² 2x414W	FNU-150m² 2x414W	FNU-170m² 2x600W	FNVB-200m² 2x600W	FNVB-240m² 2x780W	FNVB-280m² 3x600W	FNVB-340m² 3x780W
	储液器 / **Liquid Receiver**	20L	20L	20L	22L	22L	29L	29L
	蒸发温度Evaporation Temperature:-7℃; 冷凝温度Condensing Temperature:47℃; 冷媒 Refrigerant:R404A; 冷冻油 Refrigeration Oil:POE							
水冷 **Water Cooled**	型号 / **Model** **NJZY-**	012WYM-ZB	013WYM-ZB	015WYM-ZB	020WYM-ZB	022WYM-ZB	025WYM-ZB	030WYM-ZB
	制冷量 / **Ref. Capacity (kW)**	23.00	26.70	31.80	34.30	41.50	52.00	64.20
	输入功率 / **Power (kW)**	7.19	9.55	11.35	11.75	14.70	18.45	22.20
	水冷凝器 / **Water Condenser**	15HP	15HP	20HP	25HP	30HP	30HP	40HP
	蒸发温度Evaporation Temperature:-7℃; 冷凝温度Condensing Temperature:40℃; 冷媒 Refrigerant:R404A; 冷冻油 Refrigeration Oil:POE							
	压缩机 / **Compressor**	ZB88KQE	ZB95KQE	ZB114KQE	ZB130KQE	ZB150KQE	ZB190KQE	ZB220KQE
	启动电流 / **LRA (A)**	118	140	174	288	225	272	310
	最大持续运行电流 / **MCC (A)**	31	31	38	59.6	44	58	90
	回气管 / **Suction Pipe**	1-3/8"			1-5/8"			
	液管 / **Liquid Pipe**	5/8"			7/8"		1-1/8"	

高温系列 / High Temperature Series

	电压 / **Voltage**	220V 60Hz 1Ph / 220V 60Hz 3Ph		220V 60Hz 3Ph					
	名义功率 / **Nominal Power**	3HP	4HP	5HP	6HP	7HP	8HP	9HP	10HP	12HP
风冷 **Air Cooled**	型号 / **Model** **NJZY-**	003AYM-YM	004AYM-YM	005AYM-YM	006AYM-YM	007AYM-YM	008AYM-YM	009AYM-YM	010AYM-YM	012AYM-YM
	制冷量 / **Ref. Capacity (kW)**	5.53	7.90	9.71	11.51	12.75	14.90	18.28	20.54	22.57
	输入功率 / **Power (kW)**	3.23/3.06	4.30/4.25	5.10	6.05	6.95	7.77	9.53	10.57	11.61
	开放式风冷凝器 / **Open Type Air Condenser**	FNH-33m² 2x120W	FNH-33m² 2x120W	FNH-41m² 2x180W	FNH-49m² 2x180W	FNH-49m² 2x180W	FNH-60m² 2x180W	FNH-70m² 2x120W	FNH-80m² 2x180W	FNH-120m² 2x180W
	箱式风冷凝器 / **Box Type Air Condenser**	Wall Mounted Type		FNU-55m² 180W	FNU-55m² 180W	FNU-55m² 180W	FNU-70m² 2x180W	FNU-80m² 2x250W	FNU-100m² 2x250W	FNU-120m² 2x414W
	储液器 / **Liquid Receiver**	6L	6L	6L	8L	8L	14L	14L	14L	20L
	蒸发温度Evaporation Temperature: -10℃; 冷凝温度Condensing Temperature:50℃; 冷媒 Refrigerant:R404A; 冷冻油 Refrigeration Oil:POE									
水冷 **Water Cooled**	型号 / **Model** **NJZY-**	003WYM-YM	004WYM-YM	005WYM-YM	006WYM-YM	007WYM-YM	008WYM-YM	009WYM-YM	010WYM-YM	012WYM-YM
	制冷量 / **Ref. Capacity (kW)**	6.49	9.27	11.38	13.50	14.96	17.47	21.45	24.09	26.48
	输入功率 / **Power (kW)**	2.73/2.57	3.64/3.56	4.28	5.08	5.83	6.52	8.00	8.87	9.75
	水冷凝器 / **Water Condenser**	5HP	5HP	5HP	8HP	8HP	10HP	10HP	15HP	15HP
	蒸发温度Evaporation Temperature:-10℃; 冷凝温度Condensing Temperature:40℃; 冷媒 Refrigerant:R404A; 冷冻油 Refrigeration Oil:POE									
	压缩机 / **Compressor**	YM49E	YM70E	YM86E	YM102E	YM115E	YM132E	YM158E	YM182E	YM200E
	启动电流 / **LRA (A)**	76/99	140/136	136	167	180	241	241	290	290
	最大持续运行电流 / **MCC (A)**	21.8/14.3	34/21.8	25.2	29.4	32	38.5	43.9	49.3	55.4
	回气管 / **Suction Pipe**	3/4"	7/8"				1-1/8"	1-3/8"		
	液管 / **Liquid Pipe**	3/8"					5/8"			

高温系列 / High Temperature Series

	电压 / **Voltage**	220V 50Hz 1Ph / 380V 50Hz 3Ph		380V 50Hz 3Ph					
	名义功率 / **Nominal Power**	3HP	4HP	5HP	6HP	7HP	8HP	9HP	10HP
风冷 **Air Cooled**	风冷 / **Air Cooled**	003AYH-ZB	004AYH-ZB	005AYH-ZB	006AYH-ZB	007AYH-ZB	008AYH-ZB	009AYH-ZB	010AYH-ZB
	制冷量 / **Ref. Capacity (kW)**	8.99/8.81	11.85/11.95	15.05	17.65	19.40	23.40	26.00	31.00
	输入功率 / **Power (kW)**	2.65/2.57	3.36/3.41	4.30	4.87	5.35	6.66	7.51	8.77
	开放式风冷凝器 / **Open Type Air Condenser**	FNH-41m² 2x180W	FNH-49m² 2x180W	FNH-60m² 2x180W	FNH-80m² 2x180W	FNH-80m² 4x180W	FNH-100m² 4x180W	FNH-120m² 4x180W	FNH-140m² 4x250W
	箱式风冷凝器 / **Box Type Air Condenser**			FNU-70m² 2x180W	FNU-70m² 2x180W	FNU-80m² 2x250W	FNU-100m² 2x250W	FNU-120m² 2x414W	FNU-150m² 2x414W
	储液器 / **Liquid Receiver**	6L	6L	6L	8L	8L	20L	20L	20L
	蒸发温度Evaporation Temperature:7.2℃; 冷凝温度Condensing Temperature:47℃; 冷媒 Refrigerant:R404A; 冷冻油 Refrigeration Oil:POE								
水冷 **Water Cooled**	水冷 / **Water Cooled**	003WYH-ZB	004WYH-ZB	005WYH-ZB	006WYH-ZB	007WYH-ZB	008WYH-ZB	009WYH-ZB	010WYH-ZB
	制冷量 / **Ref. Capacity (kW)**	10.15/9.95	13.40/13.50	17.05	19.95	21.90	26.30	29.50	34.90
	输入功率 / **Power (kW)**	2.25/2.18	2.96/2.89	3.65	4.14	4.55	5.76	6.58	7.64
	水冷凝器 / **Water Condenser**	5HP	8HP	8HP	10HP	10HP	15HP	15HP	15HP
	蒸发温度Evaporation Temperature:7.2℃; 冷凝温度Condensing Temperature:40℃; 冷媒 Refrigerant:R404A; 冷冻油 Refrigeration Oil:POE								
	压缩机 / **Compressor**	ZB21KQE	ZB29KQE	ZB38KQE	ZB45KQE	ZB48KQE	ZB58KQE	ZB66KQE	ZB76KQE
	启动电流 / **LRA (A)**	82/40	114/50	65.5	74	101	95	111	118
	最大持续运行电流 / **MCC (A)**	23/8.0	27/11.0	13.5	16.1	17	23	24.2	26.9
	回气管 / **Suction Pipe**	3/4"	7/8"				1-1/8"	1-3/8"	
	液管 / **Liquid Pipe**	3/8"					5/8"		

	电压 / **Voltage**	380V 50Hz 3Ph						
	名义功率 / **Nominal Power**	12HP	13HP	15HP	20HP	22HP	25HP	30HP
风冷 **Air Cooled**	风冷 / **Air Cooled**	012AYH-ZB	013AYH-ZB	015AYH-ZB	020AYH-ZB	022AYH-ZB	025AYH-ZB	030AYH-ZB
	制冷量 / **Ref. Capacity (kW)**	35.80	39.00	45.90	51.20	60.10	78.89	97.40
	输入功率 / **Power (kW)**	8.63	11.30	13.30	12.30	15.25	23.84	28.73
	开放式风冷凝器 / **Open Type Air Condenser**	FNH-180m² 4x250W	FNH-180m² 4x250W	FNH-220m² 4x250W	FNV-240m² 2x780W	FNV-280m² 3x414W	FNV-340m² 3x780W	FNV-440m² 4x600W
	箱式风冷凝器 / **Box Type Air Condenser**	FNU-170m² 2x600W	FNU-170m² 2x600W	FNU-190m² 2x600W	FNV-240m² 2x780W	FNV-280m² 3x600W	FNV-340m² 3x780W	FNV-440m² 4x600W
	储液器 / **Liquid Receiver**	22L	22L	22L	22L	22L	29L	29L
	蒸发温度Evaporation Temperature:7.2℃; 冷凝温度Condensing Temperature:47℃; 冷媒 Refrigerant:R404A; 冷冻油 Refrigeration Oil:POE							
水冷 **Water Cooled**	水冷 / **Water Cooled**	012WYH-ZB	013WYH-ZB	015WYH-ZB	020WYH-ZB	022WYH-ZB	025WYH-ZB	030WYH-ZB
	制冷量 / **Ref. Capacity (kW)**	38.50	42.80	51.60	55.30	67.00	92.64	114.37
	输入功率 / **Power (kW)**	7.48	9.80	11.60	12.15	15.65	20.33	24.37
	水冷凝器 / **Water Condenser**	20HP	20HP	25HP	30HP	35HP	40HP	50HP
	蒸发温度Evaporation Temperature:7.2℃; 冷凝温度Condensing Temperature:40℃; 冷媒 Refrigerant:R404A; 冷冻油 Refrigeration Oil:POE							
	压缩机 / **Compressor**	ZB88KQE	ZB95KQE	ZB114KQE	ZB130KQE	ZB150KQE	ZB190KQE	ZB220KQE
	启动电流 / **LRA (A)**	118	140	174	288	225	272	310
	最大持续运行电流 / **MCC (A)**	31	31	38	59.6	44	58	90
	回气管 / **Suction Pipe**	1-3/8"			1-5/8"			
	液管 / **Liquid Pipe**	5/8"			7/8"		1-1/8"	

	电压 / **Voltage**	220V 60Hz 1Ph / 220V 60Hz 3Ph		220V 60Hz 3Ph					
	名义功率 / **Nominal Power**	3HP	4HP	5HP	6HP	7HP	8HP	9HP	10HP	12HP
风冷 **Air Cooled**	风冷 / **Air Cooled**	003AYH-YM	004AYH-YM	005AYH-YM	006AYH-YM	007AYH-YM	008AYH-YM	009AYH-YM	010AYH-YM	012AYH-YM
	制冷量 / **Ref. Capacity (kW)**	10.93	15.62	19.19	22.76	25.21	29.46	36.14	40.61	44.63
	输入功率 / **Power (kW)**	3.68/3.52	4.91/4.87	5.86	6.95	7.97	8.92	10.93	12.13	13.33
	开放式风冷凝器 / **Open Type Air Condenser**	FNH-41m² 2x180W	FNH-49m² 2x180W	FNH-60m² 2x180W	FNH-80m² 2x180W	FNH-80m² 4x180W	FNH-100m² 4x180W	FNH-120m² 4x180W	FNH-140m² 4x250W	FNH-180m² 4x250W
	箱式风冷凝器 / **Box Type Air Condenser**	Wall Mounted Type		FNU-70m² 2x180W	FNU-70m² 2x180W	FNU-80m² 2x250W	FNU-100m² 2x250W	FNU-120m² 2x414W	FNU-150m² 2x414W	FNU-170m² 2x600W
	储液器 / **Liquid Receiver**	6L	6L	6L	8L	8L	20L	20L	20L	22L
	蒸发温度Evaporation Temperature: 10℃; 冷凝温度Condensing Temperature:47℃; 冷媒 Refrigerant:R404A; 冷冻油 Refrigeration Oil:POE									
水冷 **Water Cooled**	水冷 / **Water Cooled**	003WYH-YM	004WYH-YM	005WYH-YM	006WYH-YM	007WYH-YM	008WYH-YM	009WYH-YM	010WYH-YM	012WYH-YM
	制冷量 / **Ref. Capacity (kW)**	12.96	18.52	22.75	26.99	29.89	34.92	42.85	48.14	52.91
	输入功率 / **Power (kW)**	3.14/2.99	4.20/4.14	4.98	5.88	6.77	7.57	9.29	10.31	11.32
	水冷凝器 / **Water Condenser**	5HP	8HP	8HP	10HP	10HP	15HP	15HP	15HP	20HP
	蒸发温度Evaporation Temperature:10℃; 冷凝温度Condensing Temperature:40℃; 冷媒 Refrigerant:R404A; 冷冻油 Refrigeration Oil:POE									
	压缩机 / **Compressor**	YM49E	YM70E	YM86E	YM102E	YM115E	YM132E	YM158E	YM182E	YM200E
	启动电流 / **LRA (A)**	76/99	140/136	136	167	180	241	241	290	290
	最大持续运行电流 / **MCC (A)**	21.8/14.3	34/21.8	25.2	29.4	32	38.5	43.9	49.3	55.4
	回气管 / **Suction Pipe**	3/4"	7/8"				1-1/8"	1-3/8"		
	液管 / **Liquid Pipe**	3/8"					5/8"			

机组配置 Unit Configuration >>

标配 **Standard**	中高温涡旋压缩机 Medium to High Temperature Scroll Compressor 冷凝器 Condenser (风冷/水冷/蒸发冷 Air Cooled/Water Cooled/Evaporative Cooling) 储液器 Liquid Receiver 供液管侧电磁阀、干燥过滤器、视液镜 Solenoid Valve, Filter Drier and Sight Glass in Liquid Line 易熔塞或安全阀 Fusible Plug or Safety Valves 避震管 Vibration Eliminator 完整管路：排气管、液管、吸气管（带保温）Complete Piping: Discharge Line, Liquid Line and Suction Line (Insulated) 压力表、压力控制器 Pressure Gauges, Pressure Controller 高低压保护、压缩机过载保护 High and low-pressure protection, compressor overload protection 出厂前压力测试和检漏 Pressure testing and leak detection before leaving the factory
选配 **Optional**	排气管侧油分离器 Oil Separator in Discharge Line 吸气管侧气分离器 Accumulator in Suction Line 风扇变速控制 Fan Speed Control 低温应用加热器 Heaters for Low Ambient Temperature 电控箱 Control Panel 消音棉 Soundproof Cotton

请联系致运获取其他规格型号的技术参数。
Please contact ZHIYUN for technical parameters of other models.

ZYS系列中低温涡旋式压缩冷凝机组
ZYS Medium to Low Temperature
Scroll Compressor Condensing Unit

◆蒸发温度范围(EVAPORATION TEMPERATURE RANGE)：-30℃～0℃
◆产品系列(Product Range)：2-7.5HP

应用范围 >>
APPLICATION

◆ 冷却物冷藏间、冻结物冷藏间、冷冻库
◆ Chilled Room, Freezer Room, Walk-in Freezer

箱式风冷系列>>
AIR BOX TYPE



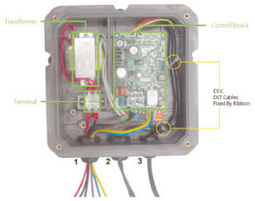

CoreSense
模块 Module

CoreSense™





水冷系列≫
WATER COOLED



开放式风冷系列≫
AIR COOLED OPEN TYPE

设计优势 >>
DESIGN BENEFIT

◆专为-18℃冷库设计，高能效比。
◆宽运行范围，低温至中温，覆盖-30℃至0℃蒸发温度。
◆涡旋压缩机相较于活塞压缩机减少70%运动部件，轴向和径向柔性提供更高的液体容忍能力，全封闭设计减少泄露的可能性。
◆装配CoreSense诊断模块，通过测定排气温度控制液体喷注，避免压缩机因高排气温度引起的故障；LED灯显示排气管温度传感器及电子膨胀阀门运行状态，帮助客戶更快速地确定故障原因。
◆精选并安装高品质制冷配件，确保系统稳定运行。
◆系统运行更为平稳，振动小、噪音低。

◆Ideal for -18℃ cold room, excellent efficiency.
◆Wide range operating envelope, from -30℃ to 0℃ evaporating temperature.
◆Scroll compressors have 70% fewer moving parts than reciprocating compressors. Their axial and radial compliance enhances liquid handling, while the hermetic design minimizes leakage risks.
◆Liquid injection technology controlled by CoreSense module protects the compressor from high discharge temperature failure; LED display on the module panel alerts user of DLT sensor status and EXV operation enabling easier trouble shooting.
◆Equip with selected refrigeration parts to achieve the stable system operation.
◆Low sound and vibration leading to quieter operation.

技术参数 Technical Parameters >>

	电压 / Voltage	220V 50Hz 1Ph / 380V 50Hz 3Ph				380V 50Hz 3Ph			
	名义功率 / Nominal Power	2HP	2.5HP	3.5HP	4HP	3HP	5HP	6HP	7.5HP
风冷 Air Cooled	型号 / Model NJZY-	002AYL-ZSI	002AYL-ZSI	003AYL-ZSI	004AYL-ZSI	003AYL-ZSI	005AYL-ZSI	006AYL-ZSI	007AYL-ZSI
	制冷量 / Ref. Capacity (kW)	2.00/1.86	2.36/2.31	3.38/2.58	4.19	3.35	4.86	5.88	6.56
	输入功率 / Power (kW)	1.82/1.80	2.20/2.02	2.95/2.32	3.31	2.73	3.64	4.5	4.98
	开放式风冷凝器 / Open Type Air Condenser	FNH-22m² 2x90W	FNH-33m² 2x120W	FNH-33m² 2x120W	FNH-41m² 2x180W	FNH-33m² 2x120W	FNH-49m² 2x180W	FNH-60m² 2x180W	FNH-70m² 4x120W
	箱式风冷凝器 / Box Type Air Condenser	FNU-30m² 180W	FNU-30m² 180W	FNU-30m² 180W	FNU-40m² 250W	FNU-30m² 180W	FNU-55m² 180W	FNU-55m² 180W	FNU-70m² 2x180W
	储液器 / Liquid Receiver	10L	10L	14L	14L	14L	14L	14L	20L
	蒸发温度Evaporation Temperature: -23℃; 冷凝温度Condensing Temperature:47℃; 冷媒 Refrigerant:R404A; 冷冻油 Refrigeration Oil:POE								
水冷 Water Cooled	型号 / Model NJZY-	002WYL-ZSI	002WYL-ZSI	003WYL-ZSI	004WYL-ZSI	003WYL-ZSI	005WYL-ZSI	006WYL-ZSI	007WYL-ZSI
	制冷量 / Ref. Capacity (kW)	2.41/1.94	2.83/2.42	3.95/3.46	5.09/4.35	2.72	5.00	6.10	6.80
	输入功率 / Power (kW)	1.66/1.76	1.92/1.94	2.48/2.60	3.07/3.18	2.22	3.50	4.34	4.81
	水冷凝器 / Water Condenser	3HP	5HP	5HP	8HP	5HP	8HP	10HP	10HP
	蒸发温度Evaporation Temperature:-23℃; 冷凝温度Condensing Temperature:40℃; 冷媒 Refrigerant:R404A; 冷冻油 Refrigeration Oil:POE								
	压缩机 / Compressor	ZSI06KQE	ZSI08KQE	ZSI11KQE	ZSI14KQE	ZSI09KQE	ZSI15KQE	ZSI18KQE	ZSI21KQE
		喷液带CoreSense模块 Liquid Injection with CoreSense Module							
	堵转电流 / LRA (A)	51.2/34.8	63.9/34.8	128/47	128/47	34.8	47	67	90.5
	最大运行电流 / MOC (A)	13.6/5.7	15.6/6.1	19/7.5	23.8/9.2	6.7	11.9	13.2	14.6
	回气管 / Suction Pipe	3/8"		7/8"		3/4"	7/8"		
	液管 / Liquid Pipe	3/8"							

机组配置 Unit Configuration >>

标配 Standard	中低温涡旋压缩机 Medium to Low Temperature Scroll Compressor 冷凝器 Condenser (风冷/水冷/Air Cooled/Water Cooled) 储液器 Liquid Receiver CoreSense 控制模块 Control Module 电子膨胀阀 Electronic Expansion Valve 排气温度传感器 DischargeTemperature Sensor 供液管侧电磁阀、干燥过滤器、视液镜 Solenoid Valve, Filter Drier and Sight Glass in Liquid Line 避震管 Vibration Eliminator	易熔塞或安全阀 Fusible Plug or Safety Valves 完整管路：排气管、液管、吸气管（带保温） Complete Piping: Discharge Line, Liquid Line and Suction Line (Insulated) 压力表、压力控制器 Pressure Gauges, Pressure Controller 高低压保护、压缩机过载保护 High and low-pressure protection, compressor overload protection 出厂前压力测试和检漏 Pressure testing and leak detection before leaving the factory
选配 Optional	排气管侧油分离器 Oil Separator in Discharge Line 吸气管侧气分离器 Accumulator in Suction Line 风扇变速控制 Fan Speed Control	低温应用加热器 Heaters for Low Ambient Temperature 电控箱 Control Panel 消音棉 Soundproof Cotton

ZYF系列低温涡旋式压缩冷凝机组
ZYF Low Temperature
Scroll Compressor Condensing Unit

◆蒸发温度范围(EVAPORATION TEMPERATURE RANGE)：-40℃～7℃

◆产品系列：单机2-40HP，可并联应用

◆Product Range: Single application from 2HP to 40HP, and parallel application is available.

应用范围 >>
APPLICATION

◆食品冷冻、冻结间、冻结物冷藏间、冰库、速冻

◆Freezing Room, Freezer Room, Ice Room, Quick Freezing



设计优势 >>
DESIGN BENEFIT

◆可选用喷液压缩机，配置DTC喷液阀来控制压缩机排气温度。

◆可选用喷气增焓压缩机，配置过冷器和EVI喷气增焓附件以控制喷气增焓回路，同时确保压缩机处在安全的排气温度下运行。装配CoreSense诊断模块，通过测定排气温度控制液体喷注，避免压缩机因高排气温度引起的故障；LED灯显示排气管温度传感器及电子膨胀阀门运行状态，帮助客户更快速地确定故障原因。

◆两款压缩机均带有内置电机保护以防止缺相或制冷剂充注不足造成的电机过热。

◆喷气增焓技术使ZYF系列在低温应用时能效比高于单级压缩机，具有卓越性能。相同名义功率下，ZYF系列制冷量和COP高于活塞式机组，体积更小，价格更有优势。

◆全年保持高能效，可在低至4.4℃冷凝温度下运行，提供高的季节能效比。

◆Equip with the liquid injection compressor, operating with a DTC valve to control discharge temperature.

◆Equip with the vapor injection compressor, optimized with the use of a sub-cooler. It operates with EVI CoreSense control kits to control vapor injection superheat as well as a safe discharge temperature. Liquid injection technology controlled by CoreSense module protects the compressor from high discharge temperature failure; LED display on the module panel alerts user of DLT sensor status and EXV operation enabling easier trouble shooting.

◆Both compressors are supplied with internal thermal protectors that prevent motor overheating in case of loss of phase or low refrigerant charge.

◆The vapor injection technology allows ZYF series to perform higher efficiency than single-stage compressors at low temperature operation condition. Compared to reciprocating units of the same nominal power, ZYF series boasts a higher refrigeration capacity and COP, as well as a more compact design and cost-competitiveness.

◆With its ability to condense down to 4℃ even in low-temperature applications, this unit offers exceptional efficiency all year long, ensuring optimal seasonal performance.

技术参数 Technical Parameters >>

	电压 / Voltage	380V 50Hz 3Ph										
	名义功率 / Nominal Power	4HP	6HP	7.5HP	9HP	10HP	13HP	15HP	20HP	25HP	30HP	40HP
风冷 Air Cooled	型号 / Model NJZY-	004AYL-ZFI	006AYL-ZFI	007AYL-ZFI	009AYL-ZFI	010AYL-ZFI	013AYL-ZFI	015AYL-ZFI	020AYL-ZFI	025AYL-ZFI	030AYL-ZFI	040AYL-ZFI
	制冷量 / Ref. Capacity (kW)	6.12	8.88	11.15	12.80	15.10	18.40	20.80	24.40	29.20	36.81	40.50
	输入功率 / Power (kW)	3.50	5.30	6.43	7.80	8.49	10.35	12.00	14.60	18.80	22.95	25.10
	开放式风冷凝器 / Open Type Air Condenser	FNH-49m² 2x180W	FNH-70m² 4x120W	FNH-80m² 4x180W	FNH-100m² 4x180W	FNH-120m² 4x180W	FNH-150m² 4x250W	FNH-180m² 4x250W	FNH-200m² 4x250W	FNV-260m² 3x414W	FNV-280m² 3x600W	FNV-360m² 3x780W
	箱式风冷凝器 / Box Type Air Condenser	FNU-55m² 180W	FNU-70m² 2x180W	FNU-80m² 2x250W	FNU-100m² 2x250W	FNU-100m² 2x414W	FNU-140m² 2x414W	FNU-170m² 2x600W	FNU-190m² 2x600W	FNU-260m² 3x600W	FNVB-280m² 3x600W	FNVB-360m² 3x780W
	储液器 / Liquid Receiver	8L	12L	14L	17L	17L	20L	20L	29L	29L	29L	29L
	蒸发温度Evaporation Temperature: -23℃; 冷凝温度Condensing Temperature:47℃; 冷媒 Refrigerant:R404A; 冷冻油 Refrigeration Oil:POE											
水冷 Water Cooled	型号 / Model NJZY-	004WYL-ZFI	006WYL-ZFI	007WYL-ZFI	009WYL-ZFI	010WYL-ZFI	013WYL-ZFI	015WYL-ZFI	020WYL-ZFI	025WYL-ZFI	030WYL-ZFI	040WYL-ZFI
	制冷量 / Ref. Capacity (kW)	6.40	9.22	11.65	13.40	15.75	19.15	21.70	25.50	30.90	38.99	43.00
	输入功率 / Power (kW)	2.99	4.59	5.58	6.77	7.47	9.11	10.60	12.90	15.25	18.59	20.30
	水冷凝器 / Water Condenser	5HP	8HP	10HP	15HP	15HP	20HP	25HP	30HP	35HP	40HP	50HP
	蒸发温度Evaporation Temperature:-23℃; 冷凝温度Condensing Temperature:40℃; 冷媒 Refrigerant:R404A; 冷冻油 Refrigeration Oil:POE											
	压缩机 / Compressor	ZFI20KQE	ZFI26KQE	ZFI36KQE	ZFI39KQE	ZFI50KQE	ZFI59KQE	ZFI68KQE	ZFI81KQE	ZFI96KQE	ZFI122KQE	ZFI140KQE
		喷气增焓带CoreSense模块和过冷器 Vapor Injection with CoreSense Module and Subcooler										
	堵转电流 / LRA (A)	64	74	102	121.4	100	118	139	168	246.5	310	310
	最大运行电流 / MOC (A)	9	13.7	16	18.1	25	29	30	31	41.5	53.6	56.3
	回气管 / Suction Pipe	7/8"				1-3/8"				1-5/8"	2"	
	液管 / Liquid Pipe	3/8"			5/8"			7/8"				

请联系致运获取其他规格型号的技术参数。
Please contact ZHIYUN for technical parameters of other models.

	电压 / Voltage	220V 60Hz 3PH						
	名义功率 / Nominal Power	4HP	5HP	6HP	8HP	9HP	10HP	12HP
风冷 Air Cooled	型号 / Model NJZY-	004AYL-YF	005AYL-YF	006AYL-YF	008AYL-YF	009AYL-YF	010AYL-YF	012AYL-YF
	制冷量 / Ref. Capacity (kW)	4.43	5.34	6.40	8.08	9.93	11.15	12.39
	输入功率 / Power (kW)	3.83	4.53	5.27	7.02	8.15	9.03	10.03
	开放式风冷凝器 / Open Type Air Condenser	FNH-49m² 2x180W	FNH-70m² 4x120W	FNH-70m² 4x120W	FNH-100m² 4x180W	FNH-100m² 4x180W	FNH-120m² 4x180W	FNH-150m² 4x250W
	箱式风冷凝器 / Box Type Air Condenser	FNU-55m² 180W	FNU-70m² 2x180W	FNU-70m² 2x180W	FNU-100m² 2x250W	FNU-100m² 2x250W	FNU-120m² 2x414W	FNU-140m² 2x414W
	储液器 / Liquid Receiver	8L	12L	12L	17L	17L	17L	20L
	蒸发温度Evaporation Temperature: -25℃; 冷凝温度Condensing Temperature:47℃; 冷媒 Refrigerant:R404A; 冷冻油 Refrigeration Oil:POE							
水冷 Water Cooled	型号 / Model NJZY-	004WYL-YF	005WYL-YF	006WYL-YF	008WYL-YF	009WYL-YF	010WYL-YF	012WYL-YF
	制冷量 / Ref. Capacity (kW)	5.22	6.31	7.55	9.57	11.77	13.21	14.68
	输入功率 / Power (kW)	3.17	3.75	4.35	5.86	6.80	7.53	8.37
	水冷凝器 / Water Condenser	5HP	8HP	8HP	15HP	15HP	15HP	20HP
	蒸发温度Evaporation Temperature:-25℃; 冷凝温度Condensing Temperature:40℃; 冷媒 Refrigerant:R404A; 冷冻油 Refrigeration Oil:POE							
	压缩机 / Compressor	YF29E	YF35E	YF41E	YF56E	YF65E	YF72E	YF80E
		喷液带喷液阀 Liquid Injection with DTC Valve						
	堵转电流 / LRA (A)	136	136	136	241	241	241	290
	最大运行电流 / MOC (A)	18.4	21.5	25.2	37.4	42	47	53.2
	回气管 / Suction Pipe	7/8"					1-3/8"	
	液管 / Liquid Pipe	3/8"			5/8"			

	电压 / Voltage	220V 60Hz 3PH					
	名义功率 / Nominal Power	7HP	8HP	9HP	10HP	12HP	13HP
风冷 Air Cooled	型号 / Model NJZY-	007AYL-YSF	008AYL-YSF	009AYL-YSF	010AYL-YSF	012AYL-YSF	013AYL-YSF
	制冷量 / Ref. Capacity (kW)	9.26	9.86	11.66	13.41	15.16	15.81
	输入功率 / Power (kW)	6.73	7.17	8.39	9.65	10.80	11.26
	开放式风冷凝器 / Open Type Air Condenser	FNH-80m² 4x180W	FNH-100m² 4x180W	FNH-100m² 4x180W	FNH-120m² 4x180W	FNH-150m² 4x250W	FNH-150m² 4x250W
	箱式风冷凝器 / Box Type Air Condenser	FNU-80m² 2x250W	FNU-100m² 2x250W	FNU-100m² 2x250W	FNU-120m² 2x414W	FNU-140m² 2x414W	FNU-140m² 2x414W
	储液器 / Liquid Receiver	14L	17L	17L	17L	20L	20L
	蒸发温度Evaporation Temperature: -25℃; 冷凝温度Condensing Temperature:47℃; 冷媒 Refrigerant:R404A; 冷冻油 Refrigeration Oil:POE						
水冷 Water Cooled	型号 / Model NJZY-	004WYL-YF	005WYL-YF	006WYL-YF	008WYL-YF	009WYL-YF	010WYL-YF
	制冷量 / Ref. Capacity (kW)	5.22	6.31	7.55	9.57	11.77	13.21
	输入功率 / Power (kW)	3.17	3.75	4.35	5.86	6.80	7.53
	水冷凝器 / Water Condenser	5HP	8HP	8HP	15HP	15HP	15HP
	蒸发温度Evaporation Temperature:-25℃; 冷凝温度Condensing Temperature:40℃; 冷媒 Refrigerant:R404A; 冷冻油 Refrigeration Oil:POE						
	压缩机 / Compressor	YSF60E	YSF65E	YSF75E	YSF85E	YSF90E	YSF100E
		喷气带EVI控制板和过冷器 Vapor Injection with EVI Control Panel and Subcooler					
	堵转电流 / LRA (A)	241	241	241	241	241	241
	最大运行电流 / MOC (A)	37.4	39.9	46.6	53.7	60.2	56.4
	回气管 / Suction Pipe	7/8"			1-3/8"		
	液管 / Liquid Pipe	3/8"	5/8"				

机组配置 Unit Configuration >>

标配 Standard	低温涡旋压缩机 Low Temperature Scroll Compressor 冷凝器 Condenser (风冷/水冷/蒸发冷 Air Cooled/Water Cooled/Evaporative Cooling) 储液器 Liquid Receiver 排气管侧油分离器 Oil Separator in Discharge Line 吸气管侧气分离器 Accumulator in Suction Line 过冷器 Subcooler CoreSense 控制模块 Control Module 电子膨胀阀 Electronic Expansion Valve 排气温度传感器 DischargeTemperature Sensor 喷气进口温度传感器 Vapor-in Temperature Sensor 喷气出口温度传感器 Vapor-out Temperature Sensor	喷液阀 DTC Valve 供液管侧电磁阀、干燥过滤器、视液镜 Solenoid Valve, Filter Drier and Sight Glass in Liquid Line 易熔塞或安全阀 Fusible Plug or Safety Valves 避震管 Vibration Eliminator 完整管路：排气管、液管、吸气管（带保温） Complete Piping: Discharge Line, Liquid Line and Suction Line (Insulated) 压力表、压力控制器 Pressure Gauges, Pressure Controller 高低压保护、压缩机过载保护 High and low-pressure protection, compressor overload protection 出厂前压力测试和检漏 Pressure testing and leak detection before leaving the factory
选配 Optional	风扇变速控制 Fan Speed Control 低温应用加热器 Heaters for Low Ambient Temperature	电控箱 Control Panel 消音棉 Soundproof Cotton

半封闭活塞式压缩冷凝机组
SEMI-HERMETIC RECIPROCATING COMPRESSOR CONDENSING UNIT

◆ 蒸发温度范围(EVAPORATION TEMPERATURE RANGE)：-45℃～+12℃

◆ 产品系列：单机2-50HP，可并联应用

◆ Product Range: Single application from 2HP to 50HP, and parallel application is available.

箱式风冷系列 >>
AIR COOLED BOX TYPE



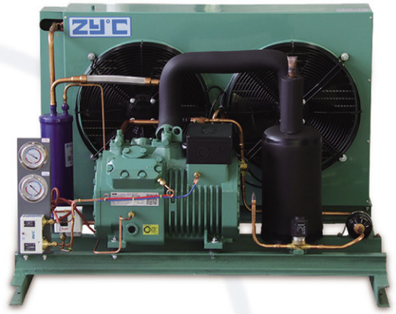





水冷系列 >>
WATER COOLED



开放式风冷系列 >>
AIR COOLED OPEN TYPE

设计优势 >> DESIGN BENEFIT

- ◆扩展的应用范围，覆盖高温、中温和低温。
- ◆采用高质量半封闭活塞压缩机，大容量电机、坚固的阀板设计和高耐磨的传动装置。半封闭设计使维护和维修更加容易，破损件容易更换。
- ◆装配加大换热面积的冷凝器，适用于极端工况，例如高蒸发温度或高环境温度，保证卓越的制冷效果。
- ◆风冷凝器可根据用户需求选配侧出风开放式或上出风箱式；水冷凝器采用水平壳管设计，配有安全阀或易熔塞。
- ◆标配油分离器，确保冷冻油从制冷剂中分离返回压缩机，避免压缩机却有烧毁；标配气分离器，保证压缩机吸入饱和蒸汽，避免压缩机液击。
- ◆可以采用变频调节来实现高效率的冷量调节。
- ◆ Extended application range, available in high, medium and low temperature.
- ◆ Adopt the quality semi-hermetic compressor, large-volume motor, solid piston design, and wear resistant drive gear. The semi-hermetic design eases the maintenance and repair, and defective components can be easily replaced.
- ◆ Robust design with good component accessibility, proven reliability.
- ◆ Equip with a condenser with enlarged heat exchange area, suitable for extreme conditions like high evaporatingor or high ambient temperatures, ensuring excellent refrigeration performance.
- ◆ Air-cooled condenser in either horizontal or vertical air discharge orientation, suitable indoor or outdoor scenario. Water-cooled condenser with a horizontal shell and tube design, equipped with safety features such as pressure relief valves and fusible plugs.
- ◆ The standard-configured oil separator effectively separates refrigeration oil from the refrigerant, ensuring its return to the compressor and preventing potential burnout. Additionally, a standard-configured accumulator is assembled to guarantee that the compressor intakes saturated steam, thereby avoiding liquid hammer damage.
- ◆ Efficient capacity control is possible by variable frequency regulation.

技术参数 Technical Parameters >> 中温系列 / Medium Temperature Series

	电压 / Voltage	380V 50Hz 3Ph						
	名义功率 / Nominal Power	3HP	4HP	5HP	6HP	7HP	9HP	10HP
风冷 Air Cooled	型号 / Model NJZY-	003AYM-BZ	004AYM-BZ	005AYM-BZ	006AYM-BZ	007AYM-BZ	009AYM-BZ	010AYM-BZ
	制冷量 / Ref. Capacity (kW)	7.35	9.10	9.84	12.36	14.99	18.18	18.79
	输入功率 / Power (kW)	3.27	4.03	4.35	5.49	6.57	8.04	7.88
	开放式风冷凝器 / Open Type Air Condenser	FNH-33 2x180W	FNH-41 2x180W	FNH-49 2x180W	FNH-60 2x180W	FNH-80 4x180W	FNH-100 4x180W	FNH-120 4x180W
	箱式风冷凝器 / Box Type Air Condenser	FNU-30 180W	FNU-55 450W	FNU-55 450W	FNU-70 2x180W	FNU-80 2x250W	FNVB-100 2x250W	FNVB-120 2x250W
	储液器 / Liquid Receiver	6L	6L	8L	8L	14L	14L	16L
	蒸发温度 Evaporation Temperature: -7℃; 冷凝温度 Condensing Temperature: 47℃; 冷媒 Refrigerant: R404A; 冷冻油 Refrigeration Oil: POE							
水冷 Water Cooled	型号 / Model NJZY-	003WYM-BZ	004WYM-BZ	005WYM-BZ	006WYM-BZ	007WYM-BZ	009WYM-BZ	010WYM-BZ
	制冷量 / Ref. Capacity (kW)	8.49	10.46	11.33	14.22	17.14	20.70	21.70
	输入功率 / Power (kW)	3.05	3.74	4.04	5.11	6.10	7.46	7.35
	水冷凝器 / Water Condenser	5HP	5HP	8HP	8HP	10HP	15HP	15HP
	蒸发温度 Evaporation Temperature: -7℃; 冷凝温度 Condensing Temperature: 40℃; 冷媒 Refrigerant: R404A; 冷冻油 Refrigeration Oil: POE							
	压缩机 / Compressor	2DES-3Y	2CES-4Y	4FES-5Y	4EES-6Y	4DES-7Y	4CES-9Y	4VES-10Y
	最大运行电流 / MOC (A)	8.6	10	10.8	13.6	16.5	20.2	19.9
	回气管 / Suction Pipe	5/8"	5/8"	5/8"	5/8"	3/4"	3/4"	1-1/8"
	液管 / Liquid Pipe	3/8"	3/8"	3/8"	3/8"	1/2"	1/2"	5/8"

	电压 / Voltage	380V 50Hz 3Ph					
	名义功率 / Nominal Power	15HP	20HP	25HP	30HP	40HP	50HP
风冷 Air Cooled	型号 / Model NJZY-	015AYM-BZ	020AYM-BZ	025AYM-BZ	030AYM-BZ	040AYM-BZ	050AYM-BZ
	制冷量 / Ref. Capacity (kW)	25.90	31.10	41.30	47.40	69.00	84.20
	输入功率 / Power (kW)	10.96	13.13	17.35	20.00	29.90	37.00
	开放式风冷凝器 / Open Type Air Condenser	FNH-180 4x250W	FNH-200 4x250W	FNV-240 2x780W	FNV-300 3x600W	FNV-350 3x780W	FNV-400 4x600W
	箱式风冷凝器 / Box Type Air Condenser	FNVB-180 2x600W	FNVB-200 2x600W	FNVB-240 2x780W	FNVB-300 3x780W	FNVB-350 3x780W	FNVB-400 3x630W
	储液器 / Liquid Receiver	20L	20L	29L	29L	29L	29L
	蒸发温度 Evaporation Temperature: -7℃; 冷凝温度 Condensing Temperature: 47℃; 冷媒 Refrigerant: R404A; 冷冻油 Refrigeration Oil: POE						
水冷 Water Cooled	型号 / Model NJZY-	015WYM-BZ	020WYM-BZ	025WYM-BZ	030WYM-BZ	040WYM-BZ	050WYM-BZ
	制冷量 / Ref. Capacity (kW)	29.90	35.80	47.20	54.20	78.90	96.30
	输入功率 / Power (kW)	10.29	12.23	16.21	18.76	27.90	34.70
	水冷凝器 / Water Condenser	20HP	25HP	30HP	40HP	50HP	60HP
	蒸发温度 Evaporation Temperature: -7℃; 冷凝温度 Condensing Temperature: 40℃; 冷媒 Refrigerant: R404A; 冷冻油 Refrigeration Oil: POE						
	压缩机 / Compressor	4PES-15Y	4NES-20Y	4HE-25Y	4GE-30Y	6GE-40Y	6FE-50Y
	最大运行电流 / MOC (A)	28.2	33.2	44	51.2	73.9	96.2
	回气管 / Suction Pipe	1-1/8"	1-1/8"	1-3/4"	2"	2"	2"
	液管 / Liquid Pipe	5/8"	3/4"	7/8"	7/8"	7/8"	7/8"

低温系列 / High Temperature Series

	电压 / Voltage	380V 50Hz 3Ph						
	名义功率 / Nominal Power	3HP	4HP	5HP	6HP	7HP	9HP	12HP
风冷 Air Cooled	型号 / Model NJZY-	003AYL-BZ	004AYL-BZ	005AYL-BZ	006AYL-BZ	007AYL-BZ	009AYL-BZ	012AYL-BZ
	制冷量 / Ref. Capacity (kW)	4.89	6.21	7.42	8.88	8.75	10.89	12.01
	输入功率 / Power (kW)	3.25	4.09	4.85	5.71	5.46	6.81	7.36
	开放式风冷凝器 / Open Type Air Condenser	FNH-41 2x180W	FNH-49 2x180W	FNH-60 2x180W	FNH-60 2x180W	FNH-80 4x180W	FNH-80 4x180W	FNH-100 4x180W
	箱式风冷凝器 / Box Type Air Condenser	FNU-55 450W	FNU-55 450W	FNU-70 2x180W	FNU-70 2x180W	FNU-80 2x250W	FNU-80 2x250W	FNVB-100 2x250W
	储液器 / Liquid Receiver	8L	8L	12L	14L	14L	16L	16L
	蒸发温度 Evaporation Temperature: -23℃; 冷凝温度 Condensing Temperature: 47℃; 冷媒 Refrigerant: R404A; 冷冻油 Refrigeration Oil: POE							
水冷 Water Cooled	型号 / Model NJZY-	003WYL-BZ	004WYL-BZ	005WYL-BZ	006WYL-BZ	007WYL-BZ	009WYL-BZ	012WYL-BZ
	制冷量 / Ref. Capacity (kW)	5.66	7.19	8.58	10.28	10.32	12.74	14.25
	输入功率 / Power (kW)	3.12	3.92	4.64	5.50	5.28	6.56	7.23
	水冷凝器 / Water Condenser	5HP	5HP	8HP	8HP	8HP	10HP	10HP
	蒸发温度 Evaporation Temperature: -23℃; 冷凝温度 Condensing Temperature: 40℃; 冷媒 Refrigerant: R404A; 冷冻油 Refrigeration Oil: POE							
	压缩机 / Compressor	4FES-3Y	4EES-4Y	4DES-5Y	4CES-6Y	4VES-7Y	4TES-9Y	4PES-12Y
	最大运行电流 / MOC (A)	9.5	12.2	14.5	17.7	16.6	19.9	22.7
	回气管 / Suction Pipe	5/8"	5/8"	3/4"	3/4"	3/4"	3/4"	1-1/8"
	液管 / Liquid Pipe	3/8"	3/8"	1/2"	1/2"	1/2"	1/2"	5/8"

	电压 / Voltage	380V 50Hz 3Ph					
	名义功率 / Nominal Power	14HP	18HP	23HP	28HP	34HP	44HP
风冷 Air Cooled	型号 / Model NJZY-	014AYL-BZ	018AYL-BZ	023AYL-BZ	028AYL-BZ	034AYL-BZ	044AYL-BZ
	制冷量 / Ref. Capacity (kW)	14.76	21.00	24.70	30.90	37.30	44.40
	输入功率 / Power (kW)	9.16	12.78	15.22	18.86	23.20	27.80
	开放式风冷凝器 / Open Type Air Condenser	FNH-120 4x180W	FNH-150 4x250W	FNH-200 4x250W	FNV-240 2x780W	FNV-300 3x600W	FNV-400 4x600W
	箱式风冷凝器 / Box Type Air Condenser	FNVB-120 2x414W	FNVB-150 2x414W	FNVB-200 2x600W	FNVB-240 2x780W	FNVB-300 3x780W	FNVB-400 3x630W
	储液器 / Liquid Receiver	20L	20L	29L	29L	29L	29L
	蒸发温度 Evaporation Temperature: -23℃; 冷凝温度 Condensing Temperature: 47℃; 冷媒 Refrigerant: R404A; 冷冻油 Refrigeration Oil: POE						
水冷 Water Cooled	型号 / Model NJZY-	014WYL-BZ	018WYL-BZ	023WYL-BZ	028WYL-BZ	034WYL-BZ	044WYL-BZ
	制冷量 / Ref. Capacity (kW)	17.34	24.30	28.40	35.70	42.60	50.80
	输入功率 / Power (kW)	8.96	12.32	14.60	18.16	22.10	26.80
	水冷凝器 / Water Condenser	15HP	20HP	20HP	30HP	30HP	40HP
	蒸发温度 Evaporation Temperature: -23℃; 冷凝温度 Condensing Temperature: 40℃; 冷媒 Refrigerant: R404A; 冷冻油 Refrigeration Oil: POE						
	压缩机 / Compressor	4NES-14Y	4HE-18Y	4GE-23Y	6HE-28Y	6GE-34Y	6FE-44Y
	最大运行电流 / MOC (A)	26.6	36.7	43.9	53.2	65.5	83.2
	回气管 / Suction Pipe	1-1/8"	1-1/8"	1-3/4"	2"	2"	2"
	液管 / Liquid Pipe	5/8"	3/4"	7/8"	7/8"	7/8"	7/8"

机组配置 Unit Configuration >>

标配 Standard	半封闭活塞压缩机 Semi-Hermetic Reciprocating Compressor 冷凝器 Condenser (风冷/水冷/蒸发冷 Air Cooled/Water Cooled/Evaporative Cooling) 储液器 Liquid Receiver 曲轴箱加热器 Crankcase Heater 排气管侧油分离器 Oil Separator in Discharge Line 吸气管侧气分离器 Accumulator in Suction Line 供液管侧电磁阀、干燥过滤器、视液镜 Solenoid Valve, Filter Drier and Sight Glass in Liquid Line	易熔塞或安全阀 Fusible Plug or Safety Valves 避震管 Vibration Eliminator 完整管路：排气管、液管、吸气管（带保温） Complete Piping: Discharge Line, Liquid Line and Suction Line (Insulated) 压力表、压力控制器 Pressure Gauges, Pressure Controller 高低压保护、压缩机过载保护 High and low-pressure protection, compressor overload protection 出厂前压力测试和检漏 Pressure testing and leak detection before leaving the factory
选配 Optional	液管侧单向阀 Check Valve in Liquid Line 风扇变速控制 Fan Speed Control 低温应用加热器 Heaters for Low Ambient Temperature	电控箱 Control Panel 消音棉 Soundproof Cotton

请联系致运获取其他规格型号的技术参数。
Please contact ZHIYUN for technical parameters of other models.

双级半封闭活塞式压缩冷凝机组
2-STAGE SEMI-HERMETIC RECIPROCATING COMPRESSOR CONDENSING UNIT

◆ 蒸发温度范围(EVAPORATION TEMPERATURE RANGE)：-50℃～-25℃
◆ 产品系列：单机5-30HP，可并联应用
◆ Product Range: Single application from 5HP to 30HP, and parallel application is available.

风冷系列 >>
AIR COOLING



水冷系列 >>
WATER COOLING

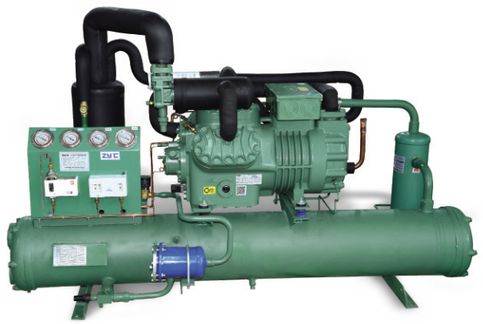

设计优势 >>
DESIGN BENEFIT

◆适用于对库温有更低要求的冷库和速冻库。
◆采用比泽尔双级半封闭活塞压缩机，制冷剂首先在低压级气缸内进行初步压缩，接着通过中间冷却器喷液系统对压缩气体降温，最后进入高压级气缸进行二次压缩。提高效率，高制冷量和低能耗。
◆配备加大冷凝器，高质量制冷配件和全面的保护装置，确保运行的稳定性和安全性。
◆安装恒压阀，根据出口压力调节流量以限制压缩机吸入压力，防止压缩机在高吸气压力下运行，从而为压缩机电机提供过载保护。
◆经久耐用，维护简单，可大大降低使用成本。

◆Ideal for extensive range of low-temperature application and blast freezer.
◆Adopt the Bitzer 2-stage semi-hermetic reciprocating compressor. The refrigerant first undergoes initial compression in the low-pressure cylinder, then cools down by intermediate cooler liquid injection, and finally enters the high-pressure cylinder for secondary compression.
◆Enhanced efficiency, high refrigeration capacity, and low energy requirement.
◆Feature a system-optimized condenser, high quality refrigeration parts, and comprehensive protection.
◆Include a constant pressure valve that adjusts steam flow based on outlet pressure, to limit the suction pressure at the compressor inlet and prevent the compressor from operating under high suction pressure, and hence provide overload protection for compressor motor.
◆Long service life due to high robustness, and low maintenance costs by service-friendly design.

技术参数 Technical Parameters >>

	电压 / Voltage	380V 50Hz 3Ph						
	名义功率 / Nominal Power	5HP	8HP	12HP	15HP	20HP	25HP	30HP
风冷 Air Cooled	型号 / Model NJZY-	005AYL-BZS	008AYL-BZS	012AYL-BZS	016AYL-BZS	020AYL-BZS	025AYL-BZS	030AYL-BZS
	制冷量 / Ref. Capacity (kW)	6.91	9.79	15.19	21.40	24.70	28.20	33.40
	输入功率 / Power (kW)	5.03	7.19	10.87	15.44	17.88	20.50	24.40
	风冷凝器 / Air Condenser	FNH-49 2x180W	FNH-70 4x120W	FNH-140 4x250W	FNH-150 4x250W	FNH-180 4x250W	FNV-200 2x780W	FNV-240 2x780W
	储液器 / Liquid Receiver	10HP	10HP	15HP	15HP	29L	29L	29L
	蒸发温度 Evaporation Temperature: -31℃; 冷凝温度 Condensing Temperature: 47℃; 冷媒 Refrigerant: R404A; 冷冻油 Refrigeration Oil: POE							
水冷 Water Cooled	型号 / Model NJZY-	005WYL-BZS	008WYL-BZS	012WYL-BZS	016WYL-BZS	020WYL-BZS	025WYL-BZS	030WYL-BZS
	制冷量 / Ref. Capacity (kW)	7.10	10.07	15.70	22.10	25.50	29.10	34.60
	输入功率 / Power (kW)	4.66	6.67	10.06	14.30	16.58	19.04	22.70
	水冷凝器 / Water Condenser	10HP	15HP	20HP	25HP	30HP	30HP	40HP
	蒸发温度 Evaporation Temperature: -31℃; 冷凝温度 Condensing Temperature: 40℃; 冷媒 Refrigerant: R404A; 冷冻油 Refrigeration Oil: POE							
	压缩机 / Compressor	S4T-5.2Y	S4N-8.2Y	S4G-12.2Y	S6J-16.2Y	S6H20.2Y	S6G-25.2Y	S6F-30.2Y
	最大运行电流 / MOC (A)	14	17	24	31	37	45	53
	回气管 / Suction Pipe	5/8"	5/8"	1-1/8"	1-3/8"	1-3/8"	1-3/8"	1-3/8"
	液管 / Liquid Pipe	7/8"	7/8"	7/8"	7/8"	7/8"	7/8"	7/8"

机组配置 Unit Configuration >>

标配 Standard	双级半封闭活塞压缩机 2-Stage Semi-Hermetic Reciprocating Compressor 冷凝器 Condenser (风冷/水冷/蒸发冷 Air Cooled/Water Cooled/Evaporative Cooling) 储液器 Liquid Receiver 曲轴箱加热器 Crankcase Heater 中冷器 Intermediate Cooler 排气管侧油分离器 Oil Separator in Discharge Line 吸气管侧气分离器 Accumulator in Suction Line 恒压阀 Constant Pressure Valve 供液管侧电磁阀、干燥过滤器、视液镜 Solenoid Valve, Filter Drier and Sight Glass in Liquid Line 易熔塞或安全阀 Fusible Plug or Safety Valves 避震管 Vibration Eliminator 完整管路：排气管、液管、吸气管（带保温） Complete Piping: Discharge Line, Liquid Line and Suction Line (Insulated) 压力表、压力控制器 Pressure Gauges, Pressure Controller 压差控制器 Pressure Difference Controller 油压保护开关 Differential Oil Pressure Switch 高低压保护、压缩机过载保护 High and low-pressure protection, compressor overload protection 出厂前压力测试和检漏 Pressure testing and leak detection before leaving the factory
选配 Optional	液管侧单向阀 Check Valve in Liquid Line 风扇变速控制 Fan Speed Control 低温应用加热器 Heaters for Low Ambient Temperature 电控箱 Control Panel

请联系致运获取其他规格型号的技术参数。
Please contact ZHIYUN for technical parameters of other models.

螺杆式压缩冷凝机组
Screw Compressor Condensing Unit

◆蒸发温度范围 (EVAPORATION TEMPERATURE RANGE): -45℃ ~ 13℃

箱式风冷系列≫
AIR COOLED BOX TYPE



开放式风冷系列≫
AIR COOLED OPEN TYPE







蒸发冷系列≫
EVAPORATIVE COOLING



水冷系列≫
WATER COOLED

设计优势 ≫
DESIGN BENEFIT

◆主要设计用于为加工冷却、冷藏和速冻提供稳定的温度控制，分为高温系列（-5℃～+12℃）、中温系列（-23℃～0℃）和低温系列（-45℃～13℃）。在各种环境下均能实现快速制冷，且性能稳定、耐用性强，同时保持低噪音和低振动。
◆机组装配比泽尔、汉钟、复盛和莱富康等领先压缩机制造商的高效螺杆制冷压缩机，单机容量大，减少了大型项目中压缩机的数量，简化系统。
◆高效的多级能量调节，可采四段式（25%-50%-75%-100%）或无段式（50%-100%），以满足不同的负荷要求。
◆配备冷轧钢或不锈钢控制面板，集成西门子PLC和7寸人机界面，并支持远程控制功能。出厂前完成压缩机接线和测试。
◆在低温应用中，安装不锈钢经济器板换以及配套的膨胀阀、电磁阀和过滤器，获得更高的负荷冷量，以提高整体性能。
◆水冷式机组装配加大换热量的水冷凝器，与储液器构成阶梯式结构，节省安装空间。如应用在排管系统中，储液器的设计容量将加大。储液器和水冷凝器均配有安全阀。
◆合理选配油分离器、气分离器和油冷却器等制冷部件，保护压缩机，提高系统能效比。
◆可以通过并联实现多种功能，扩大系统容量。

◆Designed to provide stable temperature control for processing cooling, cold storage and quick freezing, including high temperature (-5℃~+12℃), medium temperature (-23℃~0℃), and low temperature (-45℃~-13℃). Rapid cooling, robust design and low noise and vibration.
◆Equipped with high-efficiency screw refrigeration compressors from leading manufacturers like Bitzer, Hanbell, Fusheng, Refcomp, and more. The large capacity per unit reduces the quantity of compressors in large-scale projects, simplifying the system.
◆Efficient multi-level energy regulation can be achieved in 4-stage (25% -50% -75% -100%) mode or infinite (50% -100%) mode to meet different load requirements.
◆Equip with a cold-rolled steel or stainless-steel control panel, integrated with a Siemens PLC, 7' HMI, and remote-control functionality, fully tested and pre-wired to compressor before leaving the factory.
◆In low-temperature applications, a stainless-steel economizer is installed, along with the corresponding expansion valve, solenoid valve, and dried filter, to achieve higher full loading cooling capacity and enhance overall performance.
◆For water-cooled units, an enlarged shell and tube water-cooled condenser is assembled, which is in a stepped structure with the liquid receiver, saving installation space. If applied in a piping system, the design capacity of the liquid receiver will be increased. Safety valves are installed for both liquid receiver and water condenser.
◆Fine selection of oil separator, accumulator, oil cooler and other refrigeration parts to protect the compressor and maximize energy efficiency ratio.

技术参数 Technical Parameters ≫

低温系列 / Low Temperature Series

	电压 / **Voltage**	380V 50Hz 3Ph							
	名义功率 / **Nominal Power**	30HP	50HP	70HP	80HP	90HP	100HP	120HP	150HP
水冷 **Water Cooled**	型号 / **Model** **NJZY-**	030WYL-SRL	050WYL-SRL	070WYL-SRL	080WYL-SRL	090WYL-SRL	100WYL-SRL	120WYL-SRL	150WYL-SRL
	制冷量 / **Ref. Capacity (kW)**	68.6	85.4	104.8	127.4	141.7	151.9	180.3	229.6
	輸入功率 / **Power (kW)**	35.1	42.2	51.6	63.1	75.2	80.3	88	109
	水冷凝器 / **Water Condenser**	160kW	200kW	240kW	290kW	330kW	350kW	410kW	510kW
	储液器 / **Liquid Receiver**	100L	150L	200L	200L	200L	300L	300L	400L
	蒸发温度Evaporation Temperature:-23℃; 冷凝温度Condensing Temperature:40℃; 冷媒 Refrigerant:R404A; 冷冻油 Refrigeration Oil:POE								
	压缩机 / **Compressor**	SRL-160E-DS	SRL-200E-DS	SRL-240E-DS	SRL-290E-DS	SRL-330E-DS	SRL-350E-DS	SRL-400E-DS	SRL-510E-DS
	最大运行电流 / **MOC (A)**	89A	108A	119A	165A	180A	185A	217A	258A
	回气管 / **Suction Pipe**	54mm	54mm	76mm	76mm	76mm	76mm	108mm	108mm
	液管 / **Liquid Pipe**	28mm	35mm	35mm	35mm	42mm	42mm	42mm	42mm

低温系列 / Low Temperature Series

	电压 / Voltage	380V 50Hz 3Ph							
	名义功率 / Nominal Power	30HP	40HP	50HP	60HP	70HP	75HP	125HP	160HP
风冷 Air Cooled	型号 / Model NJZY-	030AYL-HSN	040AYL-HSN	050AYL-HSN	060AYL-HSN	070AYL-HSN	075AYL-HSN	125AYL-HSN	160AYL-HSN
	制冷量 / Ref. Capacity (kW)	51.6	61.9	69.4	83.5	95.6	99.7	162.4	203
	输入功率 / Power (kW)	37.2	41.3	50.2	60.3	64.8	70.9	111.2	146.9
	风冷凝器 / Air Condenser	125kW	150kW	175kW	210kW	240kW	250kW	400kW	500kW
	储液器 / Liquid Receiver	100L	100L	150L	150L	200L	200L	300L	400L
	蒸发温度Evaporation Temperature:-23℃; 冷凝温度Condensing Temperature:47℃; 冷媒 Refrigerant:R404A; 冷冻油 Refrigeration Oil:POE								
水冷 Water Cooled	型号 / Model NJZY-	030WYL-HSN	040WYL-HSN	050WYL-HSN	060WYL-HSN	070WYL-HSN	075WYL-HSN	125WYL-HSN	160WYL-HSN
	制冷量 / Ref. Capacity (kW)	54.2	65.1	74.4	90.7	103	108	177.8	222
	输入功率 / Power (kW)	32.2	36	43.3	51.6	55.9	61.7	98	125.2
	水冷凝器 / Water Condenser	125kW	150kW	175kW	210kW	240kW	250kW	420kW	510kW
	储液器 / Liquid Receiver	100L	100L	150L	150L	200L	200L	300L	400L
	蒸发温度Evaporation Temperature:-23℃; 冷凝温度Condensing Temperature:40℃; 冷媒 Refrigerant:R404A; 冷冻油 Refrigeration Oil:POE								
	压缩机 / Compressor	HSN5363-30Y	HSN6451-40Y	HSN6461-50Y	HSN7451-60Y	HSN7461-70Y	HSN7471-75Y	HSN8571-125Y	HSN8591-160Y
	最大运行电流 / MOC (A)	58A	65A	79A	98A	124A	144A	216A	274A
	回气管 / Suction Pipe	54mm	54mm	54mm	76mm	76mm	76mm	76mm	76mm
	液管 / Liquid Pipe	28mm	28mm	35mm	35mm	35mm	35mm	42mm	54mm

	电压 / Voltage	380V 50Hz 3Ph							
	名义功率 / Nominal Power	30HP	40HP	60HP	70HP	75HP	85HP	120HP	150HP
水冷 Water Cooled	型号 / Model NJZY-	030WYL-LB	040WYL-LB	060WYL-LB	070WYL-LB	075WYL-LB	085WYL-LB	120WYL-LB	150WYL-LB
	制冷量 / Ref. Capacity (kW)	48.7	72	82.5	117	126.4	138.7	178.7	214.8
	输入功率 / Power (kW)	27.3	36.9	43.9	59.4	64.1	69.2	92.2	102.4
	水冷凝器 / Water Condenser	100kW	145kW	170kW	220kW	260kW	290kW	360kW	410kW
	储液器 / Liquid Receiver	100L	100L	150L	150L	150L	150L	300L	400L
	蒸发温度Evaporation Temperature:-23℃; 冷凝温度Condensing Temperature:40℃; 冷媒 Refrigerant:R404A; 冷冻油 Refrigeration Oil:POE								
	压缩机 / Compressor	LB-100	LB-140	LB-180	LB-230	LB-250	LB-280	LB-360	LB-410
	最大运行电流 / MOC (A)	57A	78A	94A	127A	138A	151A	203A	232A
	回气管 / Suction Pipe	54mm	54mm	54mm	76mm	76mm	76mm	108mm	108mm
	液管 / Liquid Pipe	28mm	28mm	28mm	35mm	35mm	35mm	42mm	42mm





中高温系列 / Medium to High Temperature Series

	电压 / Voltage	380V 50Hz 3Ph							
	名义功率 / Nominal Power	50HP	60HP	70HP	80HP	90HP	100HP	125HP	160HP
风冷 Air Cooled	型号 / Model NJZY-	050AYL-CSH	060AYL-CSH	070AYL-CSH	080AYL-CSH	090AYL-CSH	100AYL-CSH	125AYL-CSH	160AYL-CSH
	制冷量 / Ref. Capacity (kW)	72.2	90.7	105.3	122.1	149.8	163.7	199	268
	输入功率 / Power (kW)	31.4	38.9	48.2	54.4	62.9	72.5	87.3	109.8
	风冷凝器 / Air Condenser	120kW	140kW	165kW	185kW	220kW	255kW	315kW	400kW
	储液器 / Liquid Receiver	150L	150L	200L	200L	200L	300L	300L	400L
	蒸发温度Evaporation Temperature:-7℃; 冷凝温度Condensing Temperature:47℃; 冷媒 Refrigerant:R404A; 冷冻油 Refrigeration Oil:POE								
水冷 Water Cooled	型号 / Model NJZY-	050WYL-CSH	060WYL-CSH	070WYL-CSH	080WYL-CSH	090WYL-CSH	100WYL-CSH	125WYL-CSH	160WYL-CSH
	制冷量 / Ref. Capacity (kW)	79.7	100	117.8	137.1	166.1	180.9	222	298
	输入功率 / Power (kW)	21.8	34.5	42.1	47.8	55.2	63.2	75.6	96.4
	水冷凝器 / Water Condenser	120kW	155kW	180kW	200kW	235kW	275kW	335kW	420kW
	储液器 / Liquid Receiver	150L	150L	200L	200L	200L	300L	300L	400L
	蒸发温度Evaporation Temperature:-7℃; 冷凝温度Condensing Temperature:40℃; 冷媒 Refrigerant:R404A; 冷冻油 Refrigeration Oil:POE								
	压缩机 / Compressor	CSH6553-50Y	CSH6563-60Y	CSH7553-70Y	CSH7563-80Y	CSH7573-90Y	CSH7583-100Y	CSH8563-125Y	CSH8583-160Y
	最大运行电流 / MOC (A)	86A	108A	128A	144A	162A	170A	216A	260A
	回气管 / Suction Pipe	54mm	54mm	76mm	76mm	76mm	76mm	DN100	DN100
	液管 / Liquid Pipe	22mm	28mm	28mm	28mm	35mm	35mm	35mm	35mm

机组配置 Unit Configuration >>

标配 Standard	螺杆压缩机 Screw Compressor 冷凝器 Condenser (风冷/水冷/蒸发冷 Air Cooled/Water Cooled/Evaporative Cooling) 储液器 Liquid Receiver 不锈钢经济器 Stainless Steel ECO 经济器膨胀阀、电磁阀和过滤器 ExpansionValve, Solenoid Valve, and Dried Filter for ECO 西门子PLC+7' 触摸屏电控箱 Control Panel with Siemens PLC and 7' HMI 排气管侧油分离器 Oil Separator in Discharge Line 吸气管侧气分离器 Accumulator in Suction Line 油冷却器 Oil Cooler 油路组件 Oil Way Accessories 安全阀 Safety Valves 截止阀 Stop Valves 供液管侧电磁阀、干燥过滤器、视液镜 Solenoid Valve, Filter Drier and Sight Glass in Liquid Line 避震管 Vibration Eliminator 完整管路：排气管、液管、吸气管（带保温） Complete Piping: Discharge Line, Liquid Line and Suction Line (Insulated) 压力表、压力控制器 Pressure Gauges, Pressure Controller 高低压保护、压缩机过载保护 High and low-pressure protection, compressor overload protection 出厂前压力测试和检漏 Pressure testing and leak detection before leaving the factory
选配 Optional	风扇变速控制 Fan Speed Control 冷冻油充注 Refrigeration Oil Charge

低温双级螺杆式压缩冷凝机组
Low Temperature 2-Stage Screw Compressor Condensing Unit

◆ 蒸发温度范围(EVAPORATION TEMPERATURE RANGE)：-65℃～-20℃

◆ 产品系列：单机30-150HP，可并联应用

◆ Product Range: Single application 30-150HP, and parallel application is available.

设计优势 >> DESIGN BENEFIT

◆采用复盛SDL系列或汉钟LT系列双级螺杆制冷压缩机，优化的转子型线，应用蒸发温度可低至-65℃。

◆采用两级压缩，每级压差更小，从而减少了过程中的热量损失。低温工况下，较普通单机螺杆压缩机能效提升30-40%以上。

◆容调机构精准控制系统所需要的容量调节，配用三段式（25%-50%-100%）容量控制装置，通过控制电磁阀的开关来驱动低压压缩机容量调节机构执行启动和容量调整操作。

◆特殊油路设计有效降低运装噪音。

◆可并联使用，满足大冷量需求。

◆Equip FUSHENG SDL or HANBELL LT 2-stage screw refrigeration compressors, optimized rotor profile, working evaporating temperature. as low as -65℃.

◆Adopting two-stage compression, pressure differential in each stage is smaller, reducing heat loss during the process. Under low temperature conditions, the energy efficiency of 2-stage screw compressor is improved by more than 30-40% compared to a single stage screw compressor.

◆The capacity adjustment mechanism precisely controls the capacity adjustment, which incorporates a three-stage (25% - 50% - 100%) capacity control device that manages the solenoid valve's on/off state and activates the low-pressure compressor's capacity adjustment system for smooth startup and capacity modulation.

◆Special oil circuit design effectively reduces transportation and installation noise.

◆Parallel application to meet high refrigeration demand.

技术参数 Technical Parameters >>
低温系列 / Low Temperature Series

	电压 / **Voltage**	380V 50Hz 3Ph					
	名义功率 / **Nominal Power**	30HP	50HP	75HP	100HP	125HP	150HP
水冷 **Water Cooled**	型号 / **Model** **NJZY-**	030WYL-SDL	050WYL-SDL	075WYL-SDL	100WYL-SDL	125WYL-SDL	150WYL-SDL
	制冷量 / **Ref. Capacity (kW)**	49.78	96.66	140.63	190.83	226.46	271.81
	输入功率 / **Power (kW)**	25.78	50.07	72.84	98.84	117.30	140.78
	水冷凝器 / **Water Condenser**	95kW	180kW	265kW	360kW	430kW	520kW
	储液器 / **Liquid Receiver**	100L	150L	200L	250L	300L	300L
	蒸发温度**Evaporation Temperature:**-31℃; 冷凝温度**Condensing Temperature:**40℃; 冷媒 **Refrigerant:**R404A; 冷冻油 **Refrigeration Oil:**POE						
蒸发冷 **Evaporative Cooling**	型号 / **Model** **NJZY-**	030EYL-SDL	050EYL-SDL	075EYL-SDL	100EYL-SDL	125EYL-SDL	150EYL-SDL
	制冷量 / **Ref. Capacity (kW)**	50.72	98.47	143.27	194.41	230.71	276.90
	输入功率 / **Power (kW)**	23.43	45.50	66.20	89.82	106.59	127.94
	蒸发冷凝器 / **Evaporative Cooling Condenser**	110kW	215kW	315kW	430kW	500kW	600kW
	储液器 / **Liquid Receiver**	100L	150L	200L	250L	300L	300L
	蒸发温度**Evaporation Temperature:**-31℃; 冷凝温度**Condensing Temperature:**35℃; 冷媒 **Refrigerant:**R404A; 冷冻油 **Refrigeration Oil:**POE						
	压缩机 / **Compressor**	SDL-120	SDL-220	SDL-330	SDL-450	SDL-550	SDL-660
	最大运行电流 / **MOC (A)**	58	108	165	217	295	330

请联系致运获取其他规格型号的技术参数。
Please contact ZHIYUN for technical parameters of other models.

水冷系列 >> WATER COOLED



蒸发冷系列 >> EVAPORATIVE COOLING



机组配置 Unit Configuration >>

标配 **Standard**	双级螺杆压缩机 2-Stage Screw Compressor 冷凝器 Condenser (风冷/水冷/蒸发冷 Air Cooled/Water Cooled/Evaporative Cooling) 储液器 Liquid Receiver 不锈钢经济器 Stainless Steel ECO 经济器膨胀阀、电磁阀和过滤器 ExpansionValve, Solenoid Valve, and Dried Filter for ECO 西门子PLC+7寸触摸屏电控箱 Control Panel with Siemens PLC and 7' HMI 排气管侧外置油分离器 External Oil Separator in Discharge Line 吸气管侧气分离器 Accumulator in Suction Line 油冷却器 Oil Cooler 油路组件 Oil Way Accessories 安全阀 Safety Valves 截止阀 Stop Valves 供液管侧电磁阀、干燥过滤器、视液镜 Solenoid Valve, Filter Drier and Sight Glass in Liquid Line 避震管 Vibration Eliminator 完整管路：排气管、液管、吸气管（带保温） Complete Piping: Discharge Line, Liquid Line and Suction Line (Insulated) 压力表、压力控制器 Pressure Gauges, Pressure Controller 高低压保护、压缩机过载保护 High and low-pressure protection, compressor overload protection 出厂前压力测试和检漏 Pressure testing and leak detection before leaving the factory
选配 **Optional**	风扇变速控制 Fan Speed Control 冷冻油充注 Refrigeration Oil Charge

并联压缩机冷凝机组
Parallel Compressor Condensing Unit

◆蒸发温度范围 (EVAPORATION TEMPERATURE RANGE): -45℃～13℃

设计优势 >>
DESIGN BENEFIT

◆并联机组通常应用于大型冷库、物流仓储等对制冷量和稳定性要求更高的制冷系统中。
◆精选谷轮、比泽尔、汉钟、复盛和莱富康等高品质制冷压缩机，可不等大小灵活配比压缩机。
◆通过多台压缩机的组合，获得多级输出功率组合，实现根据入货量和负荷进行平滑能量调节，保证冷冻产品的品质。
◆根据冷库温度要求，通过压力传感器监测吸气压力高低，自动控制开停不同数量的压缩机，使其始终处于最经济高效的工作状态，降低系统能耗，节约运行成本。
◆机组配备多台压缩机，确保了即使单台压缩机出现故障，其余压缩机仍能维持系统正常运行，极大提升了整体系统的可靠性。
◆配备冷轧钢或不锈钢控制面板，坚固美观。集成西门子PLC、7寸人机界面，支持远程控制功能，并在出厂前完成压缩机接线和测试。智能调节压缩机的运行时间，并根据实时负荷进行动态匹配，延长压缩机的使用寿命。
◆装配气分离器，避免液击；装配油分离器，减少润滑油进入系统，降低除霜的时间和频率，提高系统效率。
◆精准的管路设计，减少管路压力损失，提高机组效率。
◆配备高压、低压、油压差、过载、缺相等完备的安全保护模块，保证在高温低温甚至恶劣工况下均能正常运行。
◆设计紧凑，减少管路和电缆，减少设备占用空间，节约机房面积。

◆Parallel units are commonly utilized in refrigeration systems that demand higher cooling capacity and stability, such as large cold rooms and logistics warehouses.
◆Select high-quality refrigeration compressors from leading brands like Copeland, Bitzer, Hanbell, Fusheng, and Refcomp, allowing for flexible combinations of different sizes.
◆Combine multiple compressors to achieve a multi-level output power configuration, which enables smooth energy adjustment based on incoming goods and load capacity, ensuring the quality of frozen products.
◆According to the temperature requirements of the cold rooms, pressure sensor monitors the suction pressure and automatically controls the starting and stopping of different numbers of compressors. This ensures that they always operate in the most economical and efficient state, reducing system energy consumption and saving operating costs.
◆The unit is equipped with multiple compressors, ensuring that even if a single compressor fails, the remaining compressors can maintain normal system operation, greatly enhancing the overall system reliability.
◆The control panel, crafted from cold-rolled steel or stainless steel, integrates a Siemens PLC, a 7-inch HMI, and remote-control capabilities. Compressor wiring and testing are completed before leaving the factory. The intelligent adjustment of compressor running time and dynamic matching based on real-time load help extend the compressor's lifespan.
◆Equipped with an accumulator to avoid liquid slugging and an oil separator to reduce lubricant entering the system, it reduces defrosting time and frequency, improving system efficiency.
◆The precise piping design minimizes pressure loss in the pipelines, enhancing the unit's efficiency.
◆Complete with safety protection modules for high pressure, low pressure, oil pressure difference, overload, and phase loss, etc., ensuring normal operation even under high or low temperatures and harsh conditions.
◆The compact design reduces piping and cables, minimizing equipment footprint and saving valuable machine room space.

ZHIYUN COOL


中高温涡旋式并联压缩冷凝机组
Medium to High Temperature ParallelScroll Compressor Condensing Unit


低温涡旋式并联压缩冷凝机组
Low Temperature Parallel Scroll Compressor Condensing Unit


中高温螺杆式并联压缩冷凝机
Medium to High Temperature Parallel Screw Compressor Condensing Unit


低温螺杆式并联压缩冷凝机
Low Temperature Parallel Screw Compressor Condensing Unit

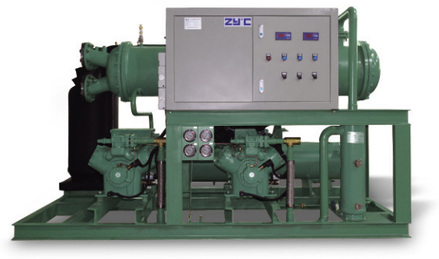
半封闭活塞式并联压缩冷凝机组
Parallel Semi-Hermetic Reciprocating Compressor Condensing Unit


风冷并联压缩冷凝机组
Air Cooled Parallel Compressor Condensing Unit


水冷并联压缩冷凝机组
Water-Cooled Parallel Compressor Condensing Unit


蒸发冷并联压缩冷凝机组
Evaporative Cooling Parallel Compressor Condensing Unit

■冷水机组
Water Chiller

◆冷却水出口温度 Cooling Water Outlet Temperature：18℃～37℃
◆冷却水进出水温差 Cooling Water Inlet and Outlet Temperature Difference：3.5℃～10℃
◆冷冻水出口温度Cooling Water Outlet Temperature：5℃～20℃
◆冷冻会进出水温差Cooling Water Inlet and Outlet Water Temperature Difference：2.5℃～10℃
◆乙二醇冷冻水出水温度Glycol Chilled WaterOutlet Temperature：-20℃～0℃
◆乙二醇冷冻水进出水温差Glycol Chilled Water Inlet and Outlet Water Temperature Difference：2.5～8℃

涡旋风冷系列 >>
SCROLL TYPE AIR COOLED



螺杆水冷系列 >>
SCREW TYPE WATER COOLED



设计优势 >>
DESIGN BENEFIT

◆选配涡旋压缩机或螺杆压缩机，可实现并联应用。涡旋式冷水机组一般采用箱式设计，外形美观，运输安装方便。螺杆式冷水机组可实现分级或无级能控，高效节能，配有油分离器和气分离器，确保运行稳定。
◆风冷式冷水机组采用翅片式风冷凝器，结构紧凑，无需冷却塔，减少水管的使用，有效避免了因冷却塔混入杂质而导致的冷水回路堵塞和冷却能力下降问题。
◆水冷式冷水机组采用壳管式水冷凝器，能效比更高。可以根据用户的实际需求，提供乙二醇等多种载冷剂的选择。蒸发器可根据应用需求进行防腐设计，采用HAL77-2铝黄铜。
◆常规冷水机组控制面板同时显示设定温度和实际温度，带有压缩机开关按钮、电源开关、水泵开关、温控器、运转指示灯、紧急停止开关和警报灯，配有压力保护、电流保护、相序保护、过热保护和防冻保护等全方位保护。螺杆式冷水机组采用西门子PLC电控箱，配置7寸触摸屏，人机界面友好，操作直观。

◆Equipped with scroll compressors or screw compressors, and parallel application is available. A scroll type water chillers typically features a box design, offering an aesthetic appearance and convenient transportation and installation. The screw type water chillers has multi-level energy regulation, efficient and energy-saving, and is equipped with the oil separator and accumulator to ensure stable operation.
◆The air-cooled water chille rutilizes a finned air condenser, offering a compact structure. It does not require a cooling tower, reducing the use of water pipes and effectively avoiding issues such as cooling water circuit blockage and cooling capacity reduction caused by impurities mixed in the cooling tower.
◆The water-cooled water chiller employs a shell and tube water condenser, which boasts a higher energy efficiency ratio. We can provide a range of refrigerant options, such as glycol, based on the actual needs of users. The evaporator can be designed for anti-corrosion according to application requirements, utilizing HAL77-2 aluminum brass.
◆The standard water chiller control panel displays both the setting temperature and the actual temperature, featuring a compressor switch, power switch, water pump switch, temperature controller, indicator light, emergency stop, and alarm light. It is equipped with comprehensive protection, including pressure protection, current protection, phase sequence protection, overheating protection, and antifreeze protection. Screw type water chillers utilize Siemens PLC, equipped with a 7-inch touch screen, a user-friendly human-machine interface, and intuitive operation.

致运冷水机组为定制产品，如需选型帮助或获取相关技术参数，请联系致运公司。
The ZHIYUN water chiller is a customized product. For assistance with model selection orto obtain relevant technical parameters, please contact ZHIYUN.

■制冷电控箱
Refrigeration Electric Control Panel

◆致运专业制冷电控箱，广泛应用于冷冻冷藏行业的各类冷库中，接线方便，操作简单。装配精创温控器，选用正泰或施耐德电气配件，性能稳定可靠。

◆The ZHIYUN professional refrigeration electric control panel is widely used in various cold rooms in the refrigeration industry, featuring convenient wiring and simple operation. It is equipped with Elitech temperature controllers and Chint or Schneider low voltage electrical accessories for stable and reliable performance.



标准电箱
Standard Control Panel



PLC电箱
PLC Control Panel

技术参数 Technical Parameters >>

规格型号 Model	温控器 Temperature Controller	保护器 Protector	断路器 Circuit Breaker	接触器 Contactor			低压电器 Low Voltage Electrical Parts	箱体尺寸 Box Size
				压缩机 Compressor	化霜 Defrosting	风机 Fan		
5HP-220V	MTC-6000N-WiFi	CP-6000N	D32A	25A	25A	9A	正泰/西门子 Chint/Siemens	340mmx420mmx135mm
5HP-380V	MTC-6000N-WiFi	CP-6000N	D32A	18A	18A	9A		
10HP-380V	MTC-6000N-WiFi	CP-6000N	D40A	25A	25A	9A		
15HP-380V	MTC-6000N-WiFi	CP-6000N	D40A	32A	32A	9A		
20HP-380V	MTC-6000N-WiFi	CP-6000N	D63A	40A	40A	12A		400mmx550mmx180mm
30HP-380V	MTC-6000N-WiFi	CP-6000N	D100A	65A	65A	18A		

设计优势 >>
DESIGN BENEFIT

- 箱体材质选用冷轧钢或不锈钢，坚固耐用。
- 配备2路库温传感器探头和1路化霜传感器探头，实现对制冷、化霜和风机的精准单独控制。
- 大尺寸多功能按键面板，双屏温度显示，可以直观查看冷库当前温度和设置温度。
- 温度控制范围-50℃～50℃，电流测量范围2～80A。
- 适用于涡旋压缩机、半封闭活塞式压缩机和螺杆压缩机，根据压缩机功率合理选配接触器，支持压缩机直接启动或开机延时。
- 可用于风冷、水冷和蒸发冷系统，排管库或风机库，满足各种系统的使用需求，并涵盖系统其他辅助设备的控制，如水泵和冷却塔等，实现一体化管理。
- 具备完善的保护措施，包括缺相、过载、相序、三相不平衡等多重保护，确保设备安全运行。
- 物联网功能，配备RS485联网模块或WIFI联网模块，可通过电脑和智能终端实现参数查看和修改，以及制冷数据的实时云储存，方便用户随时掌握设备运行状态。
- 对于并联机组控制或复杂控制需求，电控箱可选配西门子PLC，采用7寸工业级触摸屏，实时显示工作状态，提供友好的“人机界面”。
- 故障报警功能，可设置报警短信及电话通知，及时提醒用户处理异常情况。
- 可定制其他控制功能，如一用一备、一库多机、气体浓度监控、湿度监控、加湿器控制等，满足不同制冷应用场景的需求。

- The box is crafted from cold-rolled steel or stainless steel, ensuring robustness and durability.
- Equipped with two room temperature sensor probes and one defrosting sensor probe, it could achieve precise individual control over refrigeration, defrosting, and fans.
- Feature a large-size multi-functional button panel and a dual-screen temperature display that intuitively shows both the current and set temperatures.
- Temperature control range: -50℃ ~ 50℃; Current measurement range: 2 ~ 80A
- Suitable for scroll compressors, semi-hermetic reciprocating compressors, and screw compressors. Contactors are reasonably selected based on compressor power, supporting both direct and delayed compressor starts.
- Can be utilized in air-cooled, water-cooled, and evaporative cooling systems, as well as in pipe evaporator rooms or air cooler cold rooms, catering to various system needs and encompassing control of other auxiliary equipment such as water pumps and cooling towers for integrated management.
- Incorporate comprehensive protection measures, including phase loss, phase sequence, phase unbalance, overload protection, etc., ensuring safe equipment operation.
- Equipped with remote control functionality, including an RS485 module or WIFI module, allowing users to view and modify parameters via PC or APP. It also features real-time cloud storage of refrigeration data, enabling users to easily track unit operation status at any time.
- For parallel unit or complex control requirements, it utilizes a Siemens PLC and is equipped with a 7' industrial-grade touch screen that displays real-time working status and provides a user-friendly "human-machine interface".
- Feature a fault alarm function that reports equipment status in real-time through SMS, APP, email, and other fault over-temperature alarm methods, achieving 24-hour real-time monitoring of cold room.
- Additional control functions can be customized to meet the needs of different refrigeration application scenarios, such as one in use and one backup, one cold room with multiple units, gas concentration monitoring, humidity monitoring, humidifier control, etc.

ZHIYUN COOL

铝排和铝平板
Aluminum Pipe and Shelf

速冻搁架
Aluminum Pipe Contact Shelf for Quick Freezing

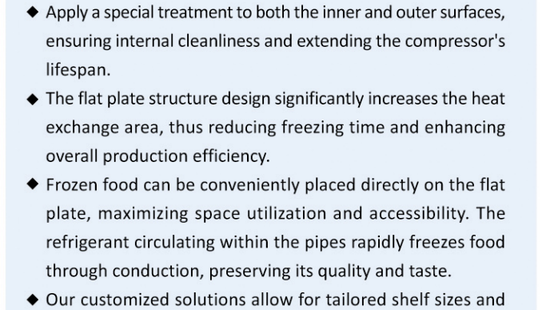

设计优势 >>
DESIGN BENEFIT

- 铝管平板采用优质铝合金一次挤压成型，管内有齿形，导热性好；防腐蚀性强，符合食品卫生标准。
- 内外表面特殊处理，保持内部清洁，延长压缩机使用寿命。
- 平板式结构，显著增加换热面积，缩短冻结时间，提高生产效率。
- 待冷冻食品可直接放置在管道的平板上，有效利用空间，方便拿取；管道内的制冷剂通过传导直接冷冻食品，快速降温，迅速冻结，保证食品的质量和口感。
- 定制化产品，根据冷库尺寸设计搁架尺寸和管路。

- The aluminum pipe flat plate is crafted from high-quality aluminum alloy through a one-time extrusion process, featuring internal serrations for extraordinary thermal conductivity. It exhibits strong corrosion resistance and fully complies with food hygiene standards.
- Apply a special treatment to both the inner and outer surfaces, ensuring internal cleanliness and extending the compressor's lifespan.
- The flat plate structure design significantly increases the heat exchange area, thus reducing freezing time and enhancing overall production efficiency.
- Frozen food can be conveniently placed directly on the flat plate, maximizing space utilization and accessibility. The refrigerant circulating within the pipes rapidly freezes food through conduction, preserving its quality and taste.
- Our customized solutions allow for tailored shelf sizes and piping configurations based on the dimensions of your cold room facility.

铝排
Aluminum Pipe Evaporator



应用范围 >>
APPLICATION

- -45℃～-10℃肉类、海鲜类、冻品和冰块低温冷库
- -45 C~-10 C Low Temperature Cold Rooms for Meat, Seafood, Frozen Food and Ice

设计优势 >>
DESIGN BENEFIT

- 采用Φ28或Φ32铝管，与翅片一体压铸成型，管内有内平行细齿，增大表面积。
- 采用表面阳极氧化处理的铝合金，防腐能力强，具有优良的导热能力。
- 出厂前经2.5MPa气密检验合格和4.5MPa耐压寿命试验，坚固耐用。
- 吊装于库顶，直冷式自然对流，食品干耗少；结霜少且薄，除霜周期长，库温波动小。
- 系统干净，符合食品卫生标准，延长压缩机使用寿命。
- 铝合金翅片与铝管平行，片状，形成若干个平行通道。系统制冷时，冷空气在通道内形成烟道效应，加速下沉，降温速度快，节能省电。
- 可选配热氟冲霜系统。

- Adopt Φ28 or Φ32mm aluminum pipes, integrated with the fins by die casting, and fine parallel teeth inside the pipes augment the surface area.
- Select aluminum alloy that undergoes asurface anodic oxidation process, strong corrosion resistance and excellent thermal conductivity.
- Tested for air tightness at 2.5MPa and pressure resistance at 4.5MPa.
- Mounted on the ceiling of the cold room, it facilitates direct cooling and natural convection, significantly reducing food weight loss and humidity loss. With less and thicker frost formation, it boasts a longer defrosting cycle and maintains a stable cold room temperature.
- The system is clean, adhering to food hygiene standards, and significantly extends the compressor's lifespan.
- The wings align parallel to the pipes, forming multiple parallel channels. When the system is cooling, cold airgenerates an airflow stack effect and is accelerated to sink. The temperature decreases quickly, saving energy.
- An optional hot fluorine defrosting system is available.

冷风机
Cold Room Evaporator-air Cooler



吊顶式 / Ceiling Mounted Type



高拉伸式 / High Air Duct with Integral Stretching Type



双侧出风式 / Double-Side Blow Type



斜出风式 / Slim Type





落地式 / Floor Standing Type



风筒式 / Long Distance Air Duct Type

◆致运冷风机是一款专为冷库制冷系统设计的蒸发器，通过与压缩冷凝机组和膨胀阀配合工作，有效实现降低冷库温度的功能。它在食品、医药、化工以及物流等多个工业领域均有广泛应用，适用于各类保鲜库、冷藏库、冷冻库、速冻库以及加工车间。设计合理，质量可靠，性能稳定。根据适用的库温范围，致运冷风机可细分为三大系列：DEH高温系列，适用于保鲜库和加工车间；DEM中温系列，专为冷藏库设计；以及DEL低温系列，用于冷冻库和速冻库。

◆The ZHIYUN cold room indoor air cooler is a specialized evaporator compatible with compressor condensing units and expansion valves, tailored for lowering the temperature in cold storage facilities. Widely employed in diverse industrial sectors including food, medicine, chemicals, and logistics, it's ideal for various types of cold rooms, such as chilled storage rooms, freezer rooms, blast freezers, and processing rooms. Reasonable design, reliable quality, and consistent performance. Depending on the warehouse's temperature range, the ZHIYUN air cooler comes in three primary series: the DEH high-temperature series, perfect for chilled storages and processing workshops; the DEM medium-temperature series, made especially for walk-in freezers; and the DEL low-temperature series, intended for freezer rooms, blast freezers and freezing tunnels.

设计优势 >>
DESIGN BENEFIT

◆以高效节能为核心设计理念，有效降低产品干耗，维持食品品质。
◆设计紧凑，最大程度利用冷库空间。
◆提供多样化的形式规格与丰富的选配配件，支持非标定制，满足不同应用的个性化需求。
◆可满足R404A、R507A、R134a、R22等多种制冷剂的使用。
◆选用高品质喷塑钢板、铝镁合金或304不锈钢作为外壳材料，不仅具备卓越的防腐性能，更在美观度与耐用性上表现出色，确保冷风机的长期稳定运行。
◆通过先进的机械胀管技术使铜管与铝翅片紧密结合，高效换热，快速制冷。
◆标配300mm至630mm的外转子电机，功率大，噪音低，射程远，库温均匀。
◆提供电化霜与水冲霜两种除霜方式；电化霜系统采用优质不锈钢电加热管，均匀分布于盘管与内水盘板上，除霜效果显著；水冲霜系统则采用筛网式冲霜水盘及内外挡水板设计，实现快速化霜且对库温影响小。
◆片距：4.5mm，6.0mm和9.0mm，以适应不同的应用温度。

◆Performance Characteristics: Designed for efficient and energy-saving operations, reducing product drying and preserving food quality.
◆Compact design maximizes the utilization of cold storage space.
◆Customization Capabilities: Offer a wide range of specifications, along with a diverse selection of optional accessories. Flexible non-standard customization options are available to cater to the unique needs of every customer.
◆Compatibility: Compatible with various refrigerants including R404A, R507A, R134a, R22, and more.
◆Shell Materials: Choose from high quality plastic-sprayed steel plate, aluminum magnesium alloy, or 304 stainless steel, with strong anti-corrosion performance, beautiful appearance, and enduring durability.
◆Coil Design: Employ mechanical expansion techniques to seamlessly integrate copper tubes with aluminum fins, ensuring superior heat exchange efficiency and rapid cooling capabilities.
◆Fan Motors: Standardized with 300mm-630mm external rotor motors, high power, low noise.
◆Defrosting Methods: Electrical defrosting or water defrosting; The electrical defrosting model features high-grade stainless steel heating tubes evenly distributed across the coil and internal water plate, achieving exceptional defrosting effect; The water defrosting model adopts a screen type defrosting water tray and inner and outer water blocking plates, ensuring quick defrosting with little impact on cold room temperatures.
◆Fin Spacing: 4.5mm, 6.0mm, and 9.0mm for different applied temperature.

定制范围 >>
CUSTOMIZATION RANGE

◆电压：3ph/380V-420V/50Hz, 3ph/460V/60Hz, 1ph/220V/50-60Hz, 3ph/380V/60Hz, 3ph/220V/50-60Hz
◆材料：喷塑钢板、铝镁合金、304不锈钢
◆结构：吊顶式、落地式、双侧出风式、斜出风式
◆尺寸：根据冷库空间定制
◆风机：外转子电机、风筒式、高拉伸式、风扇加热、铰链风扇、EC风扇、布袋连接式风圈
◆除霜：电化霜、水冲霜、热气除霜、额外的融霜回路、除霜布袋
◆水盘：防结露加热接水盘、保温水盘
◆其他：环氧涂层翅片、隔热风机盖板、百叶挡板、保温挡板、支脚安装、冷却液、泵系统

◆Voltage: 3ph/380V-420V/50Hz, 3ph/460V/60Hz, 1ph/220V/50-60Hz, 3ph/380V/60Hz, 3ph/220V/50-60Hz
◆Materials: plastic-sprayed steel plate, aluminum magnesium alloy, 304 stainless steel
◆Structure: ceiling mounted type, floor standing type, double-side blow type, slim type
◆Product Size: customized according to cold room space
◆Fan Motor: external rotor motor, long distance air duct, high air duct with integral stretching, fan heating, hinged fan, EC fan, bag connected wind coil
◆Defrosting: electrical defrosting, water defrosting, hot air defrosting, additional defrosting circuit, defrosting bag
◆Water Tray: anti condensation heating water tray, insulation water tray
◆Other: epoxy coated fins, insulation fan cover plate, louver baffle, insulation baffle, support foot installation, coolant, pump system



钣金喷塑 / Plastic-Sprayed Steel Plate



铝镁合金 / Aluminum Magnesium Alloy



不锈钢 / Stainless Steel

命名规则/Naming Rule

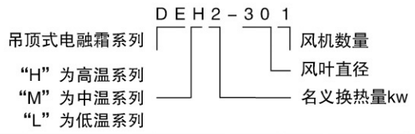

技术参数 Technical Parameters >>

电化霜冷风机 / Electrical Defrosting Air Cooler

型号 / Model		DEH2-301	DEH4-302	DEH6-302	DEH8-402	DEH11-402	DEH17-452	DEH21-452	DEH26-453	DEH31-453	DEH37-454	DEH42-454	DEH52-504	DEH67-603	DEH81-603	DEH99-603	DEH118-703
名义换热量 / Nominal Heat Exchange Capacity	kw	1.9	3.8	5.8	7.9	11	16.8	21	26	31	37	42	52	67	81	99	118
空气流量 / Air Volume	m³/h	1680	3360	3360	7500	7500	10000	10000	15000	15000	20000	20000	25600	33600	33600	36000	42600
内部容积 / Internal Volume	dm³	1.58	3.06	4.59	6.23	8.31	13.13	16.41	20.45	24.25	28.24	32.24	40.22	51.74	62.33	75.03	90.38
外部面积 / External Area	m²	10	20	29	40	53	85	107	134	160	187	213	267	341	414	499	603
铝片间距 Aluminum Fin Spacing	mm	4.5							4.5								
风机总功率 Fan Motor Total Power	W	75	150	150	432	432	500	500	750	750	1000	1000	1656	3300	3300	4500	6600
风机数量 Fan Motor Quantity	Set	1	2	2	2	2	2	2	3	3	4	4	4	3	3	3	3
融霜总功率 Defrosting Total Power	kW	1	1.8	1.8	2	3	5.6	5.6	6.4	6.8	8	8.8	12	15.3	18	19.8	21.6
盘管进出口 Coil Inlet/Outlet	mm	12/16	12/16	12/16	16/25	16/25	19/32	19/32	19/38	19/38	22/42	22/42	22/50	22/50	25/54	28/54	28/54
排水口径 / Drainage	mm	32	32	32	32	32	32	32	2*32	2*32	2*32	2*32	2*32	2*32	2*32	2*32	2*32

型号 / Model		DEM1-301	DEM2.5-302	DEM4-302	DEM5-402	DEM7-402	DEM11-452	DEM14-452	DEM17-453	DEM21-453	DEM24-454	DEM28-454	DEN35-504	DEM44-603	DEM54-603	DEM65-603	DEM78-703
名义换热量 / Nominal Heat Exchange Capacity	kw	1.3	2.5	3.8	5.2	6.9	11	13.9	17	21	24	28	35	44	54	65	78
空气流量 / Air Volume	m³/h	1680	3360	3360	7500	7500	10000	10000	15000	15000	20000	20000	25600	33600	33600	36000	42600
内部容积 / Internal Volume	dm³	1.58	3.06	4.59	6.23	8.31	13.13	16.41	20.45	24.25	28.24	32.24	40.22	51.74	62.33	75.03	90.38
外部面积 / External Area	m²	7	15	22	30	40	64	80	100	120	140	160	200	256	310	374	452
铝片间距 Aluminum Fin Spacing	mm	6.0							6.0								
风机总功率 Fan Motor Total Power	W	75	150	150	432	432	500	500	750	750	1000	1000	1650	3300	3300	4500	6600
风机数量 Fan Motor Quantity	Set	1	2	2	2	2	2	2	3	3	4	4	4	3	3	3	3
融霜总功率 Defrosting Total Power	kW	1	1.8	1.8	3	4	8.4	8.4	9.6	10.2	12	13.2	18	20.4	24	26.4	36
盘管进出口 Coil Inlet/Outlet	mm	12/16	12/16	12/16	16/25	16/25	19/32	19/32	19/38	19/38	22/42	22/42	22/50	22/50	25/54	28/54	28/54
排水口径 / Drainage	mm	32	32	32	32	32	32	32	2*32	2*32	2*32	2*32	2*32	2*32	2*32	2*32	2*32

型号 / Model		DEL1-301	DEL1.5-302	DEL2-302	DEL3-402	DEL4-402	DEL7-452	DEL8-452	DEL10-453	DEL12-453	DEL14-454	DEL16-454	DEL21-504	DEL26-603	DEL32-603	DEL39-603	DEL47-703
名义换热量 / Nominal Heat Exchange Capacity	kw	0.7	1.5	2.3	3.1	4.1	6.6	8.2	10.3	12	14	16	21	26	32	39	47
空气流量 / Air Volume	m³/h	1680	3360	3360	7500	7500	10000	10000	15000	15000	20000	20000	25600	33600	33600	36000	42600
内部容积 / Internal Volume	dm³	1.58	3.06	4.59	6.23	8.31	13.13	16.41	20.45	24.25	28.24	32.24	40.22	51.74	62.33	75.03	90.38
外部面积 / External Area	m²	5	10	15	20	27	43	53	67	80	93	107	134	170	207	250	301
铝片间距 Aluminum Fin Spacing	mm	9.0							9.0								
风机总功率 Fan Motor Total Power	W	75	150	150	432	432	500	500	750	750	1000	1000	1656	3300	3300	4500	6600
风机数量 Fan Motor Quantity	Set	1	2	2	2	2	2	2	3	3	4	4	4	3	3	3	3
融霜总功率 Defrosting Total Power	kW	1	1.8	1.8	3	4	8.4	8.4	9.6	10.2	12	13.2	18	20.4	24	26.4	36
盘管进出口 Coil Inlet/Outlet	mm	12/16	12/16	12/16	16/25	16/25	19/32	19/32	19/38	19/38	22/42	22/42	22/50	22/50	25/54	28/54	28/54
排水口径 / Drainage	mm	32	32	32	32	32	32	32	2*32	2*32	2*32	2*32	2*32	2*32	2*32	2*32	2*32

尺寸参数 Dimension Parameters >>

型号 / Model		DEH2-301
		DEM1-301
		DEL1-301
L	mm	820
B	mm	430
H	mm	470
C	mm	330
A	mm	580
D	mm	400

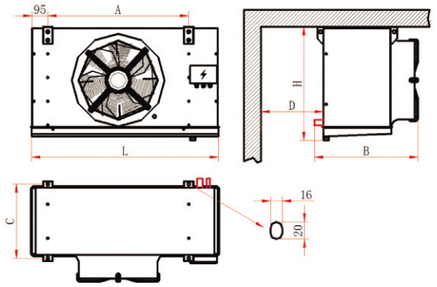

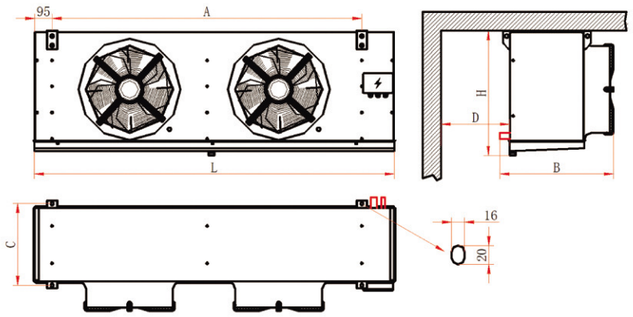





型号 / Model		DEH4-302	DEH6-302	DEH8-402	DEH11-402
		DEM2.5-302	DEM4-302	DEM5-402	DEM7-402
		DEL1.5-302	DEL2-302	DEL3-402	DEL4-402
L	mm	1370		1480	
B	mm	430		470	
H	mm	470		570	
C	mm	330		370	
A	mm	1130		1230	
D	mm	400		500	

型号 / Model		DEH17-452	DEH21-452
		DEM11-452	DEM14-452
		DEL7-452	DEL8-452
L	mm	1910	
B	mm	610	
H	mm	670	
C	mm	440	
A1	mm	830	
A2	mm	800	
D	mm	600	

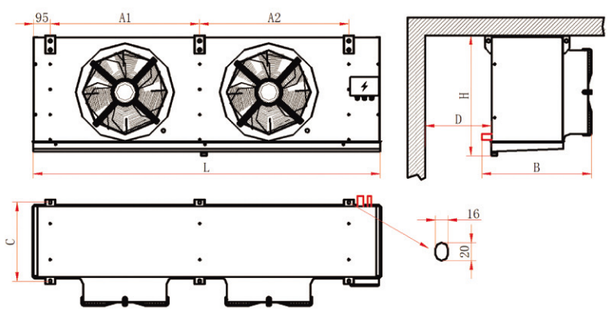

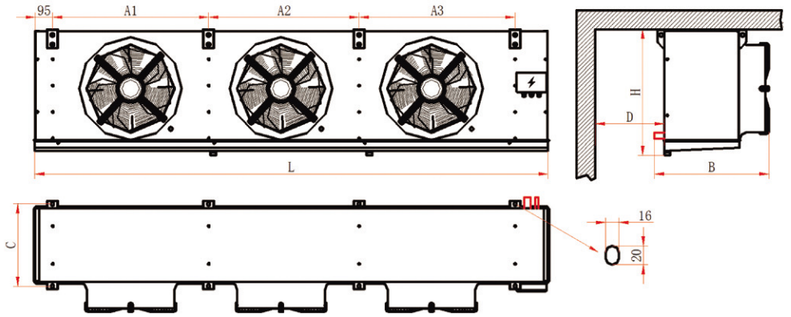

型号 / Model		DEH26-453	DEH31-453	DEH67-603	DEH81-603	DEH99-603	DEH118-703
		DEH17-453	DEM21-453	DEM44-603	DEM54-603	DEM65-603	DEM78-703
		DEL10-453	DEL12-453	DEL26-603	DEL32-603	DEL39-603	DEL47-703
L	mm	2320	2710	2710	3220	3430	3700
B	mm	610	610	1030	1030	1030	1030
H	mm	670	670	870	870	970	1070
C	mm	440	440	670	670	670	670
A1	mm	700	830	830	1000	1070	1160
A2	mm	670	800	800	970	1040	1130
A3	mm	670	800	800	970	1040	1130
D	mm	600	600	800	800	900	1000

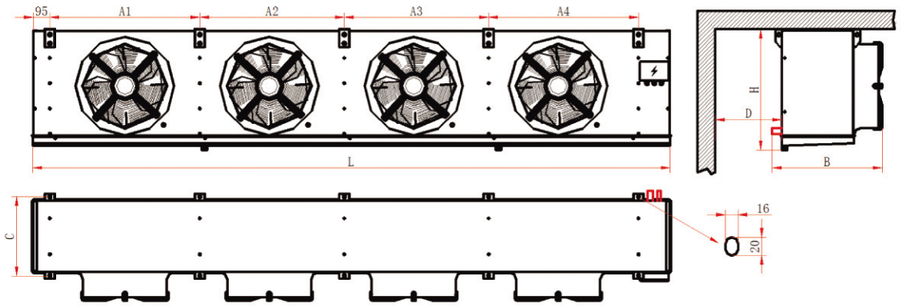

型号 / Model		DEH37-454	DEH42-454	DEH52-504
		DEM24-454	DEM28-454	DEN35-504
		DEL14-454	DEL16-454	DEL21-504
L	mm	3110	3510	3170
B	mm	610	610	710
H	mm	670	670	770
C	mm	440	440	540
A1	mm	730	830	745
A2	mm	700	800	715
A3	mm	700	800	715
A4	mm	700	800	715
D	mm	600	600	700

技术参数 Technical Parameters >>

水冲霜冷风机 / Water Defrosting Air Cooler

命名规则/Naming Rule

DW H 17 – 4 5 2

- 吊顶式水融霜系列
- “H” 为高温系列
- “M” 为中温系列
- “L” 为低温系列
- 风机数量
- 风叶直径
- 名义换热量kw

型号 / Model		DWH17-452	DWH21-452	DWH26-453	DWH31-453	DWH37-454	DWH42-454	DWH52-504	DWH67-603	DWH81-603	DWH99-603	DWH118-703
名义换热量 / Nominal Heat Exchange Capacity	kw	16.8	21	26	31	37	42	52	67	81	99	118
空气流量 / Air Volume	m³/h	10000	10000	15000	15000	20000	20000	25600	33600	33600	36000	42600
内部容积 Internal Volume	dm³	13.13	16.41	20.45	24.25	28.24	32.24	40.22	51.74	62.33	75.03	90.38
外部面积 External Area	m²	85	107	134	160	187	213	267	341	414	499	603
铝片间距 / Aluminum Fin Spacing	mm	4.5										
风机总功率 Fan Motor Total Power	W	500	500	750	750	1000	1000	1656	3300	3300	4500	6600
风机数量 Fan Motor Quantity	Set	2	2	3	3	4	4	4	3	3	3	3
盘管进出口 Coil Inlet/Outlet	mm	19/32	19/32	19/38	19/38	22/42	22/42	22/50	22/50	25/54	28/54	28/54
排水口径 / Drainage	mm	89	89	89	89	89	89	89	89	108	108	108

机型号 / Model		DWM11-452	DWM14-452	DWM17-453	DWM21-453	DWM24-454	DWM28-454	DWM35-504	DWM44-603	DWM54-603	DWM65-603	DWM78-703
名义换热量 / Nominal Heat Exchange Capacity	kw	11	13.9	17	21	24	28	35	44	54	65	78
空气流量 / Air Volume	m³/h	10000	10000	15000	15000	20000	20000	25600	33600	33600	36000	42600
内部容积 Internal Volume	dm³	13.13	16.41	20.45	24.25	28.24	32.24	40.22	51.74	62.33	75.03	90.38
外部面积 External Area	m²	64	80	100	120	140	160	200	256	310	374	452
铝片间距 / Aluminum Fin Spacing	mm	6.0										
风机总功率 Fan Motor Total Power	w	500	500	750	750	1000	1000	1656	3300	3300	4500	6600
风机数量 Fan Motor Quantity	Set	2	2	3	3	4	4	4	3	3	3	3
盘管进出口 Coil Inlet/Outlet	mm	19/32	19/32	19/38	19/38	22/42	22/42	22/50	22/50	25/54	28/54	28/54
排水口径 / Drainage	mm	89	89	89	89	89	89	89	89	108	108	108

型号 / Model		DWL7-452	DWL8-452	DWL10-453	DWL12-453	DWL14-454	DWL16-454	DWL21-504	DWL26-603	DWL32-603	DWL39-603	DWL47-703
名义换热量 / Nominal Heat Exchange Capacity	kw	6.6	8.2	10.3	12	14	16	21	26	32	39	47
空气流量 / Air Volume	m³/h	10000	10000	15000	15000	20000	20000	25600	33600	33600	36000	42600
内部容积 Internal Volume	dm³	13.13	16.41	20.45	24.25	28.24	32.24	40.22	51.74	62.33	75.03	90.38
外部面积 External Area	m²	43	53	67	80	93	107	134	170	207	250	301
铝片间距 / Aluminum Fin Spacing	mm	9.0										
风机总功率 Fan Motor Total Power	w	500	500	750	750	1000	1000	1656	3300	3300	4500	6600
风机数量 Fan Motor Quantity	Set	2	2	3	3	4	4	4	3	3	3	3
盘管进出口 Coil Inlet/Outlet	mm	19/32	19/32	19/38	19/38	22/42	22/42	22/50	22/50	25/54	28/54	28/54
排水口径 / Drainage	mm	89	89	89	89	89	89	89	89	108	108	108

尺寸参数 Dimension Parameters >>

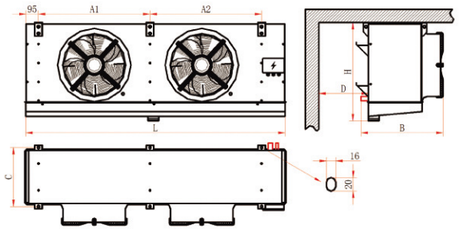

型号 / Model		DWH17-452	DWH21-452
		DWM11-452	DWM14-452
		DWL7-452	DWL8-452
L	mm	1910	
B	mm	675	
H	mm	840	
C	mm	540	
A1	mm	830	
A2	mm	800	
D	mm	600	

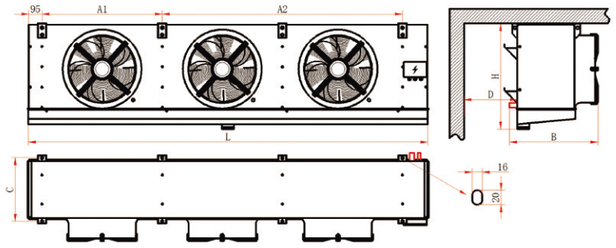

型号 / Model		DWH37-454	DWH42-454	DWH52-504
		DWL14-454	DWM28-454	DWM35-504
		DWM24-454	DWL16-454	DWL21-504
L	mm	3110	3510	3170
B	mm	675	675	725
H	mm	840	840	840
C	mm	540	540	590
A1	mm	730	830	745
A2	mm	700	800	715
A3	mm	700	800	715
A4	mm	700	800	715
D	mm	600	600	700

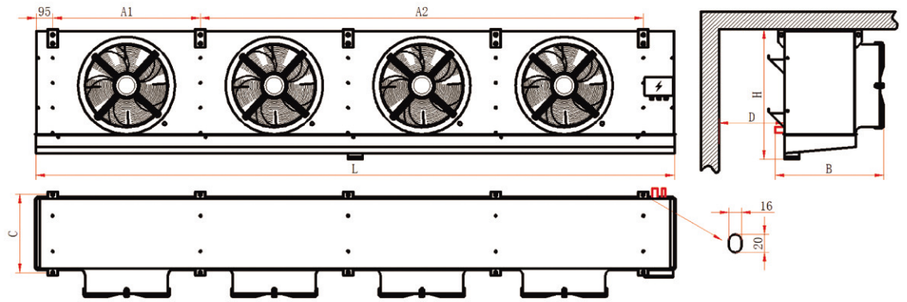

型号 / Model		DWH26-453	DWH31-453	DWH67-603	DWH81-603	DWH99-603	DWH118-703
		DWM17-453	DWM21-453	DWM44-603	DWM54-603	DWM65-603	DWM78-703
		DWL10-453	DWL12-453	DWL26-603	DWL32-603	DWL39-603	DWL47-703
L	mm	2320	2710	2710	3220	3430	3700
B	mm	675	675	1070	1070	1140	1140
H	mm	840	840	1080	1080	1150	1250
C	mm	540	540	670	670	740	740
A1	mm	700	830	830	1000	1150	1160
A2	mm	670	800	800	970	1040	1130
A3	mm	670	800	800	970	1040	1130
D	mm	600	600	800	800	900	1000

命名规则/Naming Rule

DTH8－401

吊顶式双侧出风系列
“H”为高温系列
“M”为中温系列
“L”为低温系列
风机数量
风叶直径
名义换热量kw

技术参数 Technical Parameters >>

双侧出风冷风机 / Double-Side Blow Air Cooler

型号 / Model		DTH8-402	DTH12-402	DTH17-403	DTH20-403	DTH25-404	DTH28-404	DTH32-453	DTH36-454	DTH40-455
名义换热量 / Nominal Heat Exchange Capacity	kw	8	12	17	20	25	28	32	36	40
空气流量 / Air Volume	m³/h	7840	7840	11760	11760	15680	15680	16245	21660	27075
内部容积 Internal Volume	dm³	6.37	9.43	12.39	15.51	18.23	21.12	24.25	27.17	30.1
外部面积 External Area	m²	40	60	80	100	120	140	160	180	200
铝片间距 / Aluminum Fin Spacing	mm	4.5								
风机总功率 Fan Motor Total Power	w	432	432	648	648	864	864	750	1000	1250
风机数量 Fan Motor Quantity	套	2	19/32	3	3	4	4	3	4	5
盘管进出口 Coil Inlet/Outlet	mm	16/25	19/32	19/32	19/38	19/38	22/42	22/50	22/50	22/50
排水口径 / Drainage	mm	2*G1"								





壳管式蒸发器
Shell and Tube Evaporator



◆致运壳管式蒸发器广泛应用于多个行业，如食品加工、化工、制药及纺织。采用高效内螺纹铜管，增强管内侧换热。外形尺寸设计合理，充分考虑压缩机的接管方便。此外，蒸发器可与壳管式水冷凝器组合用于水冷式冷水机组，平放或叠放，优化整体管道连接，节省机组占地空间。蒸发器的筒身设有排水装置，以免冬天由于环境温度低而造成管程内的积水结冰冻破换热管。蒸发器的进、出口水都设有温度控制点，防止冷冻水的温度过低导致换热管的破裂。产品在2.4MPa气压下经过气密性测试，确保出厂品质。可根据用戶需求定制。

◆The ZHIYUN shell and tube evaporator finds extensive applications in various industries, including food processing, chemicals, pharmaceuticals, and textiles. Using high-efficiency internally threaded copper pipes to enhance heat transfer on the inner side of the pipes. Its external dimensions are meticulously designed, taking into account the compressor's connection convenience. This evaporator can be integrated with a shell and tube water condenser on a water-cooled chiller unit, either horizontally or in a stacked configuration, optimizing pipeline connections and saving installation space. To prevent water accumulation, freezing, and potential damage to the heat exchange tubes during colder months, the evaporator body features a drainage system. Additionally, temperature control points are installed at the evaporator's water inlet and outlet to safeguard against chilled water-induced ruptures in the heat exchange tubes. Each product undergoes a rigorous airtightness test at 2.4MPa to guarantee factory-level quality. We also offer non-standard customization to cater to specific customer requirements.

技术参数 Technical Parameters >> 单机系列壳管式干式蒸发器 / Single Compressor Dry Evaporator with Straight Copper Pipe

型号 Model	冷冻吨 Ref. Ton (RT)	外型尺寸及安装尺寸 (mm) External Dimensions and Installation Sizes								重量 Weight (kg)	进出口直径 Connection (inch)					
		D	L1	L	A	D1	B	F	G		RG	RL	W	P1	P2	H
													MPT	FPT	FPT	FPT
KEW60L	60	325	1829	1924	225	406	320	160	95	290	2-5/8'	1-3/8'	4'	3/4'	3/4'	3/8'
KEW65L	65	325	1829	1924	225	406	320	160	95	300	2-5/8'	1-3/8'	4'	3/4'	3/4'	3/8'
KEW70L	70	325	1829	1924	225	406	320	160	95	320	2-5/8'	1-5/8'	4'	3/4'	3/4'	3/8'
KEW75L	75	325	1829	1924	225	406	320	160	95	335	2-5/8'	1-5/8'	4'	3/4'	3/4'	3/8'
KEW80L	80	325	2159	1924	225	406	320	160	95	343	2-5/8'	1-5/8'	4'	3/4'	3/4'	3/8'
KEW85L	85	325	2159	2265	225	406	320	160	95	380	2-5/8'	1-5/8'	4'	3/4'	3/4'	3/8'
KEW90L	90	356	2159	2265	225	440	350	175	110	440	2-5/8'	1-5/8'	4'	3/4'	3/4'	3/8'
KEW95L	95	356	2159	2265	225	440	350	175	110	450	2-5/8'	1-5/8'	4'	3/4'	3/4'	3/8'
KEW100L	100	356	2159	2265	225	440	350	175	110	522	2-5/8'	1-5/8'	4'	3/4'	3/4'	3/8'
KEW110L	110	356	2540	2646	225	440	350	175	110	538	2-5/8'	1-5/8'	4'	3/4'	3/4'	3/8'
KEW120L	120	356	2540	2646	225	440	350	175	110	600	2-5/8'	1-5/8'	4'	3/4'	3/4'	3/8'
KEW130L	130	356	2540	2646	225	440	350	175	110	617	2-5/8'	1-5/8'	4'	3/4'	3/4'	3/8'
KEW140L	140	356	2540	2646	225	440	350	175	110	635	3-1/8'	2-1/8'	4'	3/4'	3/4'	3/8'
KEW150L	150	356	2540	2646	225	440	350	175	110	652	3-1/8'	2-1/8'	4'	3/4'	3/4'	3/8'

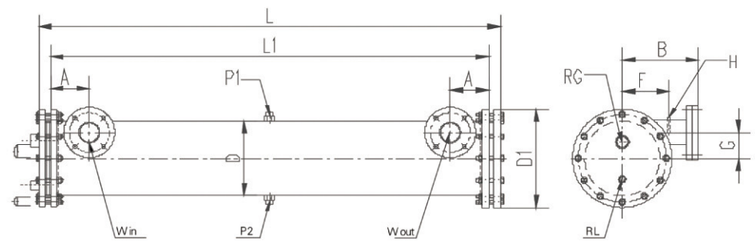

请联系致运获取其他规格型号的技术参数。
Please contact ZHIYUN for technical parameters of other models.

风冷凝器
Air Cooled Condenser

◆风冷凝器是用于风冷制冷系统中与压缩机配套的换热器。致运风冷凝器系列包含多款型号，FNH型、FNV型、FNW型、GP型为开放式结构，FNU型、FNVB型、FNWB型为箱式结构。为满足不同的应用需要，提供侧出风和顶出风两种出风方式。

◆Theair cooled condenser is a heat exchange equipment used in the air-cooled refrigeration system working with the compressor. The ZHIYUN air cooled condensers include various models, the open structure FNH, FNV, FNW, and GP models, and the box structure FNU, FNVB, and FNWB models. Sideward blowing andupward blowing are both available to accommodate diverse application

设计优势 >>
DESIGN BENEFIT

◆外壳采用优质喷塑钢板或铝镁合金，耐腐蚀，外形美观。
◆铜盘管交错排列，间距21.65mm×25mm；铝翅片间距1.5-3.5mm，自由组合；应用机械胀管技术使铜管与铝翅片紧密结合，显著提升换热效率。
◆采用大风量、低转速电机，功率高，噪音小。
◆开放式结构设计直观，便于设备安装和日常维护；箱式结构设计紧凑，压缩机、制冷配件、铜管和电控箱可安装在箱体内，箱门易于拆卸，箱体预留压力表和连接管孔位，占用空间小，便于运输。
◆GP型采用卧式安装的平板结构，下进风，上出风，主要用于配套换热量需求较大的采用远置式安装的制冷机组。
◆产品出厂前经过2.5～3.5MPa的气密性试验和干燥空气保压。
◆可适用于R22、R134a、R404a、R507a等制冷剂。
◆定制范围：电压、产品尺寸、换热面积、电机数量、出风方向。

◆The shell is made of high-quality plastic-sprayed steel plate or aluminum magnesium alloy, corrosion-resistant and beautiful appearance.
◆The coil features a staggered arrangement of copper tubes, which are tightly integrated with aluminum fins via mechanical expansion, significantly improving heat transfer efficiency.
◆Equipped with high-volume and low-speed fan motors, high power and low noise.
◆The intuitive design of the open structure condenser makes the installation and maintenance easier. The design of the box structure condenser is compact, occupying less space and greatly facilitating transportation.The compressor, refrigeration parts, copper tubes, and control panel can be installed inside the box. The box door is easy to disassemble,and pressure gauge and connection pipe holes are reserved on the box.
◆The GP models adopt a flat plate structure with horizontal installation, with lower inlet and upper outlet, mainly used for supporting condensing units with high heat exchange requirements and long-distance installation.
◆The product has undergone a 2.5~3.5MPa air tightness test and dry air pressure retention before delivery.
◆Compatible with various refrigerants, including R22, R134a, R404a, R507a, etc.
◆Customization options include voltage, product size, heat exchange area, motor quantity, and air discharge orientation, tailored to users' specific needs.

FNH风冷凝器
FNH Air Cooled Condenser

型号 Model	名义换热量 Nominal Heat Exchange Capacity (W)	换热面积 Heat Exchange Area (m^2)	排弯数 QTY of Row Bends	风机 Fan Motor			连接管 Connection		外形尺寸(mm) Product Size					
				直径 Dia. (mm)	风量 Air Volume (m^3/h)	功率 Power (W)	进气管 Inlet (mm)	出液管 Outlet (mm)	A	B	C	D	E	F
FNH22	6600	22	4 x 8	300	2 x 1835	2 x 90	Φ 16	Φ 16	800	280	435	730	120	180
FNH28	8400	28	4 x 8	300	2 x 1835	2 x 90	Φ 19	Φ 16	900	280	435	830	120	180
FNH33	6600	33	4 x 9	350	2 x 2805	2 x 120	Φ 19	Φ 16	950	300	485	880	140	200
FNH41	12300	41	4 x 10	400	2 x 4545	2 x 180	Φ 19	Φ 16	1020	300	535	950	140	200
FNH49	14700	49	4 x 12	400	2 x 4545	2 x 180	Φ 19	Φ 16	1050	300	635	980	140	200
FNH60	18000	60	5 x 12	400	2 x 4545	2 x 180	Φ 22	Φ 16	1050	300	635	980	140	200
FNH70	21000	70	4 x 18	350	4 x 2805	4 x 120	Φ 25	Φ 19	1050	300	935	980	140	200
FNH80	24000	80	4 x 20	400	4 x 4545	4 x 180	Φ 25	Φ 19	1050	300	1035	980	140	200
FNH100	30000	100	5 x 20	400	4 x 4545	4 x 180	Φ 25	Φ 19	1050	300	1035	980	140	200
FNH120	36000	120	5 x 20	400	4 x 4545	4 x 180	Φ 28	Φ 19	1250	300	1035	1180	140	200
FNH140	42000	140	5 x 24	450	4 x 5910	4 x 250	Φ 28	Φ 19	1200	350	1235	1130	190	250
FNH150	45000	150	5 x 26	450	4 x 5910	4 x 250	Φ 28	Φ 19	1200	350	1335	1130	190	250
FNH180	54000	180	6 x 26	450	4 x 5910	4 x 250	Φ 32	Φ 22	1200	350	1335	1130	190	250



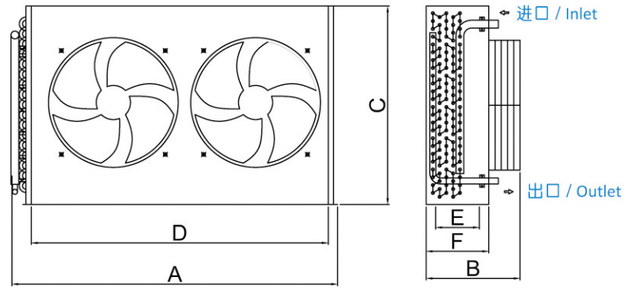

FNV风冷凝器
FNV Air Cooled Condenser

型号 Model	名义换热量 Nominal Heat Exchange Capacity (W)	换热面积 Heat Exchange Area (m^2)	风机 Fan Motor			连接管 Connection		外形尺寸(mm) Product Size			安装尺寸(mm) Installation Size	
			直径 Dia. (mm)	风量 Air Volume (m^3/h)	功率 Power (W)	进气管 Inlet (mm)	出液管 Outlet (mm)	A	B	C	D	E
FNV100	29.7	100	2-450	2-5415	2-250	25	19	1500	840	830	1200	805
FNV120	35.7	120	2-500	2-7395	2-414	28	19	1550	930	920	1150	895
FNV150	44.6	150	2-500	2-7395	2-414	28	19	1550	970	930	1150	935
FNV180	53.7	180	2-550	2-8920	2-600	28	22	1750	970	930	1350	935
FNV200	59.4	200	2-550	2-8920	2-600	32	22	1850	970	930	1450	935
FNV240	71.3	240	2-600	2-11000	2-780	32	22	1950	1060	1020	1550	1025
FNV280	83.2	280	3-500	3-7395	3-414	35	22	2240	1060	1020	1840	1025
FNV300	89.1	300	3-550	3-8920	3-600	38	22	2360	1060	1020	1960	1025
FNV350	103.9	350	3-600	3-11000	3-780	38	25	2690	1060	1020	2290	1025
FNV400	118.8	400	4-550	4-8920	4-600	42	25	3050	1060	1020	2650	1025



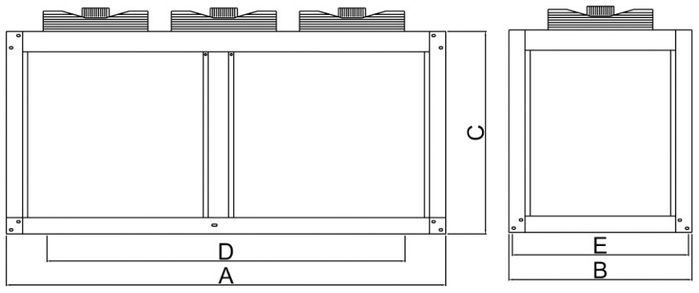

FNW风冷凝器
FNW Air Cooled Condenser



GP风冷凝器
GP Air Cooled Condenser



FNU风冷凝器
FNU AirCooledCondenser

型号 Model	名义换热量 Nominal Heat Exchange Capacity (W)	换热面积 Heat Exchange Area (m^2)	风机 Fan Motor			连接管 Connection		外形尺寸(mm) Product Size			安装尺寸(mm) Installation Size	
			直径 Dia. (mm)	风量 Air Volume (m^3/h)	功率 Power (W)	进气管 Inlet (mm)	出液管 Outlet (mm)	A	B	C	D	E
FNU30	8.4	30	400	3920	180	19	16	700	650	660	400	690
FNU55	13.9	55	500	7395	450	19	16	900	800	760	600	840
FNU70	21.8	70	2-400	2-3920	2-180	22	16	1200	800	760	800	840
FNU80	24.9	80	2-450	2-5415	2-250	25	19	1450	800	760	1050	840
FNU100	29.1	100	2-450	2-5415	2-250	25	19	1450	800	760	1050	840
FNU120	34.5	120	2-500	2-7395	2-414	28	19	1450	860	860	1050	900
FNU140	37.5	140	2-500	2-7395	2-414	28	19	1550	860	860	1150	900
FNU170	46.4	170	2-550	2-8920	2-600	32	22	1550	860	860	1150	900
FNU190	51.3	190	2-550	2-8920	2-600	32	22	1550	900	960	1150	940
FNU210	56.7	210	2-600	2-11000	2-780	35	22	1710	960	960	1310	1000



标准款 / Standard



不锈钢款 / Stainless Steel

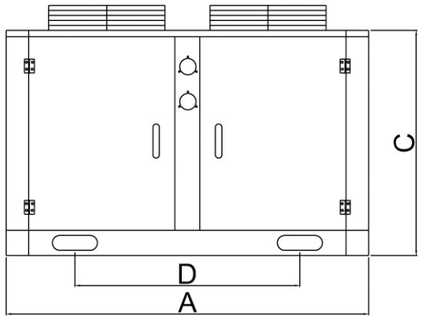

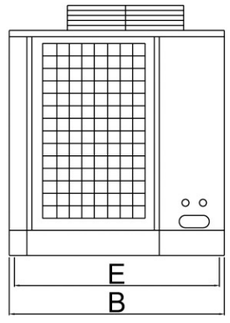

FNVB风冷凝器
FNVB Air Cooled Condenser

型号 Model	名义换热量 Nominal Heat Exchange Capacity (W)	换热面积 Heat Exchange Area (m^2)	风机 Fan Motor			连接管 Connection		外形尺寸(mm) Product Size			安装尺寸(mm) Installation Size		
			直径 Dia. (mm)	风量 Air Volume (m^3/h)	功率 Power (W)	进气管 Inlet (mm)	出液管 Outlet (mm)	A	B	C	D	E	F
FNVB100	29.7	100	2-450	2-5415	2-250	25	19	1480	840	1595	1180	805	700
FNVB120	35.7	120	2-500	2-7395	2-414	28	19	1530	930	1685	1230	895	700
FNVB150	44.6	150	2-500	2-7395	2-414	28	19	1530	970	1745	1230	935	750
FNVB180	53.7	180	2-550	2-8920	2-600	28	22	1730	970	1795	1430	935	800
FNVB200	59.4	200	2-550	2-8920	2-600	32	22	1830	970	1795	1430	935	800
FNVB240	71.3	240	2-600	2-11000	2-780	32	22	2130	970	1845	1730	935	850
FNVB280	83.2	280	3-550	3-8920	3-600	35	22	2430	970	1845	2030	935	850
FNVB300	89.1	300	3-600	3-11000	3-780	38	22	2580	970	1845	2180	935	850
FNVB350	103.9	350	3-600	3-11000	3-780	38	25	2670	1060	1985	2270	1025	900
FNVB400	118.8	400	3-800	3-12200	3-630	42	25	3030	1060	1985	2630	1025	900



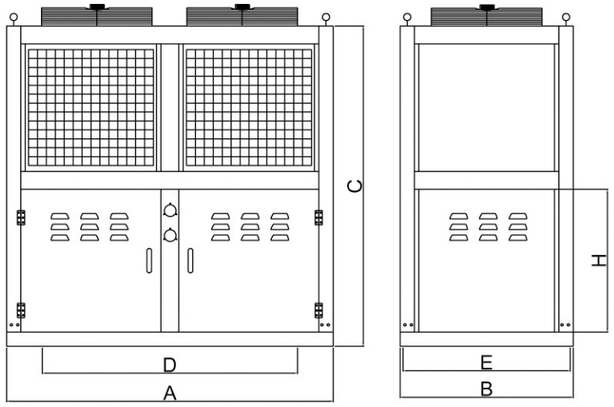

ZHIYUN COOL

壳管式水冷凝器
Shell and Tube Water Cooled Condenser



◆致运水冷凝器系列，广泛适用于冷冻业、冷库工程及中央空调主机配套。采用高效外螺纹铜管，极大提升了换热效率。海水水冷凝器通常选用HAL77-2铝黄铜或纯钛作为冷凝管材，钛钢复合板管板，铸铁或碳钢端盖，增强耐腐蚀性。产品在2.4MPa气压下经过气密性测试，确保出厂品质。此外，配备的安全易容塞可在壳程温度达到一定水平时自动融化降压，增强使用安全性，同时也可选装安全阀。水冷凝器底部设计的集液包能储存多余制冷剂、排除多余水分并过滤杂质。端盖上的排水装置则可防止冬季低温导致管程内积水结冰，从而保护水冷凝器不受损害。可根据客戶需求进行非标定制。

◆The ZHIYUN water cooled condenser are commonly utilized in the refrigeration industry, cold room projects, and central air conditioning systems. The use of high-efficiency externally threaded copper pipes greatly improves heat exchange efficiency. For seawater condensers, HAL77-2 aluminum brass or pure titanium is typically employedas the condensing pipe, coupled with titanium steel composite plates, tube plates, and either cast iron or carbon steel end caps to enhance corrosion resistance. Each product undergoes airtightness testing at a pressure of 2.4MPa, guaranteeing its quality. Additionally, we've equipped the condensers with a safety plug that automatically melts and releases pressure when the shell side temperature reaches a certain level, bolstering user safety. Optionally, a safety valve can also be installed. The water-cooled condenser features a liquid collector at the bottom, designed to store excess refrigerant, eliminate surplus water, and filter out impurities. A drainage device on the end cover prevents water accumulation and freezing during winter, thus protecting the condenser from potential damage. Nonstandard customization can be made according to customer needs.

技术参数 Technical Parameters >>
单系统水冷凝器 / Single System Water Cooled Condenser

型号 Model	配用机组 Match Unit	换热量 (kW) Heat Exchange Capacity	外型尺寸及安装尺寸 (mm) External Dimensions and Installation Sizes						进气 (mm) Gas Inlet	出液 (mm) Liquid Outlet	水管管径 Water Tube N-1/N-2 (RC)
			A	A1	B	C	D	E	N-6	N-3	
KCWS-003/JBA	3HP	8.3	827	700	168	500	280	100	16	12	1'
KCWS-005/JBA	5HP	12.5	827	700	168	500	280	100	22	12	1-1/2'
KCWS-008/JBA	8HP	19	927	800	168	600	280	100	22	16	1-1/2'
KCWS-010/JBA	10HP	23.7	1127	1000	168	800	280	100	28	16	1-1/2'
KCWS-015/JBA	15HP	36.9	1249	1100	219	900	330	100	28	19	2'
KCWS-020/JBA	20HP	43.4	1249	1100	219	900	330	100	28	19	2'
KCWS-025/JBA	25HP	50.4	1309	1160	219	960	330	100	35	22	2'
KCWS-030/JBA	30HP	59.2	1649	1500	219	1100	330	100	35	28	2'
KCWS-040/JBA	40HP	88.8	1621	1500	219	1100	330	100	42	28	2-1/2'
KCWS-005/JB1A	5HP	13.3	1021	900	219	700	330	100	22	12	1-1/2'
KCWS-008/JB1A	8HP	19.7	1121	1000	219	800	330	100	22	16	1-1/2'
KCWS-010/JB1A	10HP	24.7	1121	1000	219	800	330	100	28	16	1-1/2'
KCWS-015/JB1A	15HP	36.9	1251	1100	273	900	380	100	28	19	2'
KCWS-020/JB1A	20HP	43	1358	1210	273	900	380	100	28	22	2'
KCWS-025/JB1A	25HP	50.3	1648	1500	273	1100	380	100	35	22	2'
KCWS-030/JB1A	30HP	59.2	1648	1500	273	1100	380	100	35	28	2'
KCWS-035/JB1A	35HP	71	1648	1500	273	1100	380	100	35	28	2-1/2'
KCWS-040/JB1A	40HP	88.7	1648	1500	273	1100	380	100	42	28	2-1/2'
KCWS-050/JB1A	50HP	100.6	1848	1700	273	1300	380	100	42	35	2-1/2'
KCWS-060/JB1A	60HP	130.7	1848	1700	273	1300	380	100	42	35	2-1/2'

压力表接口 Pressure Gauges Interface N-4：RC 1/8'
易熔塞接口 Safe Fusible Plug Interface N-5：RC 3/8'

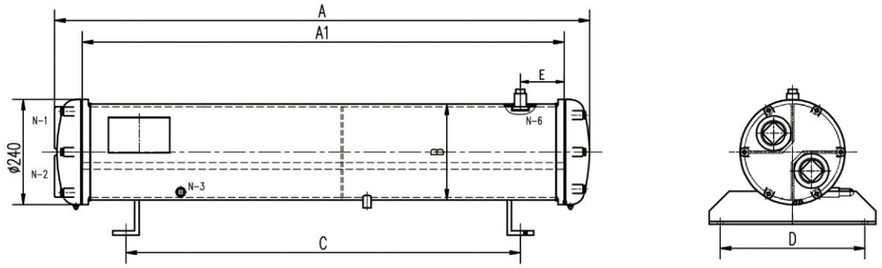

型号 Model	配用机组 Match Unit	换热量 (kW) Heat Exchange Capacity	外型尺寸及安装尺寸 (mm) External Dimensions and Installation Sizes						进气 (mm) Gas Inlet	出液 (mm) Liquid Outlet	进水 (inch) Water Inlet	出水 (inch) Water Outlet
			A	A1	B	C	D	E	N-6	N-3	N-2	N-1
KCWS-070/JCA	70	154.4	2035	1700	325	1000	450	150	54	42	3'	3'
KCWS-080/JCA	80	177.1	2285	1950	325	1200	450	150	54	42	3'	3'
KCWS-090/JCA	90	200.2	2285	1950	325	1200	450	150	54	42	3'	3'
KCWS-100/JCA	100	223.9	2436	2100	325	1300	450	200	54	42	4'	4'
KCWS-120/JCA	120	263.3	2636	2300	325	1500	450	200	54	42	4'	4'
KCWS-130/JCA	130	284.3	2813	2400	377	1400	500	250	67	54	4'	4'
KCWS-140/JCA	140	303.2	2813	2400	377	1400	500	250	67	54	4'	4'
KCWS-150/JCA	150	320.8	2913	2500	377	1500	500	250	67	54	4'	4'
KCWS-160/JCA	160	338.1	2913	2500	377	1500	500	250	67	54	4'	4'
KCWS-180/JCA	180	355.3	2913	2500	377	1500	500	250	76	54	5'	5'
KCWS-200/JCA	200	397.8	3013	2600	377	1600	500	250	76	54	5'	5'

压力表接口 Pressure Gauges Interface N-4：RC 1/8'
易熔塞接口 Safe Fusible Plug Interface N-5：RC 3/8'
安全阀接口 Safe Valve Interface：RC 3/8'；安全阀为选配件。Safety valve is optional components.

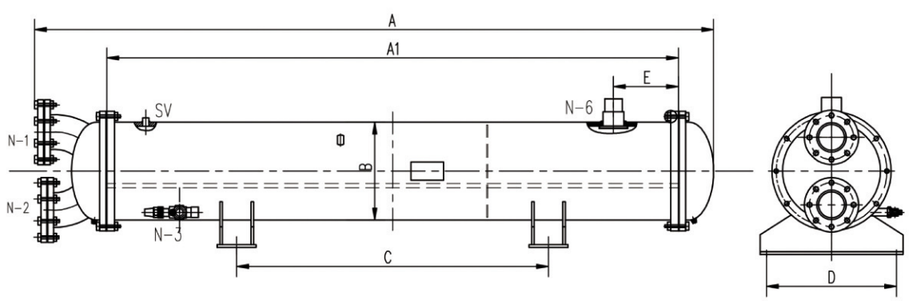

请联系致运获取其他规格型号的技术参数。
Please contact ZHIYUN for technical parameters of other models.

储液器
Liquid Receiver



◆致运储液器分卧式和立式设计，广泛适用于冷冻业、冷库工程及中央空调主机配套。储液器上设计了进液口、出液口、安全阀口、排污口、气相平衡口和高低液位视液镜，筒径大于500mm且容积大于300L的型号增设一个中间液位视液镜。外形尺寸设计合理，便于配套机组，可与水冷凝器配套定制成上下结构或阶梯形结构。筒体内部经过酸洗钝化处理，清洁度高，不易锈蚀。产品在2.4～2.9MPa气压下经过气密性测试，确保出厂品质。此外，配备的安全易容塞可在壳程温度达到一定水平时自动融化降压，增强使用安全性，同时也可选装安全阀。可根据客戶需求进行非标定制。

◆The ZHIYUN liquid receiver is designed in both horizontal and vertical type, all commonly utilized in the refrigeration industry, cold room projects, and central air conditioning systems.It is designed with inlet, outlet, safety valve, discharge outlet, balance port of gasphase, and high and low liquid level sight glass. Models with a cylinder diameter greater than 500mm and a volume greater than 300L are equipped with an extra intermediate liquid level sight glass. The reasonable external dimensions design eases the assemble of refrigeration unit. Water cooled condenser and liquid receiver could be designed together as anup-down structure or stepped structure. All products undergo airtightness testing at a pressure of 2.4~2.9 MPa, guaranteeing its quality. Additionally, we've equipped the liquid receiver with a safety plug that automatically melts and releases pressure when the shell side temperature reaches a certain level,bolstering user safety. Optionally, a safety valve can also be installed. Nonstandard customization can be made according to customer needs.

技术参数 Technical Parameters >>

159mm-219mm筒径储液器 / Liquid Receiver with 159-219mm Cylinder Diameter

型号 Model	容积 (L) Volume	外形尺寸 (mm) External Dimensions				安装尺寸 (mm) Installation Size	
		A	B	C	ΦD	E	F
KCY-159-012	11.6	650	240	230	159	520	200
KCY-159-013	13.4	750	260	230	159	620	220
KCY-159-015	15.2	850	320	230	159	700	280
KCY-159-017	17	950	340	235	159	800	300
KCY-159-020	19.7	1100	360	235	159	900	320
KCY-159-022	21.5	1200	360	235	159	900	320
KCY-159-023	23.3	1300	360	235	159	1000	310
KCY-159-025	25.1	1400	360	235	159	1000	310
KCY-219-022	21.9	650	310	290	219	520	260
KCY-219-025	25.2	750	310	290	219	620	260
KCY-219-029	28.6	850	310	290	219	700	260
KCY-219-032	32	950	310	295	219	800	360
KCY-219-037	37	1100	365	295	219	900	305
KCY-219-040	40.4	1200	365	295	219	900	305
KCY-219-044	43.7	1300	365	295	219	1100	305
KCY-219-047	47.1	1400	365	295	219	1100	305

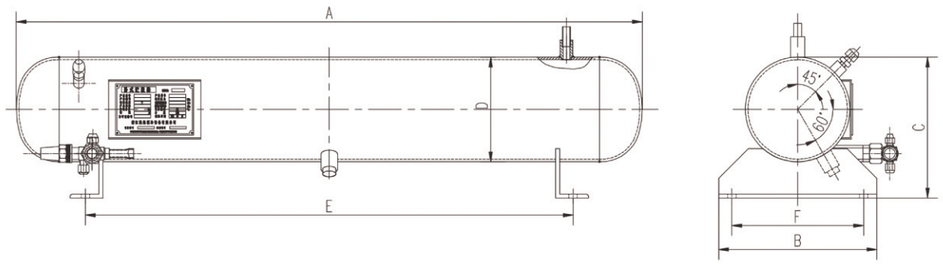

273mm以上筒径储液器 / Liquid Receiver with 273mm and above Cylinder Diameter

型号 **Model**	容积 (L) **Volume**	ΦD (mm)	L (mm)	L1 (mm)	L2 (mm)	L3 (mm)	L4 (mm)	H (mm)	F (mm)	G (mm)	进口 (mm) **Inlet**	出口 (mm) **Outlet**
ECW-50	50	273	986	200	330	120	660	388	180	260	1-3/4'-12UN	1-3/4'-12UN
ECW-80	80	377	878	130	190	140	480	512	250	350	1-3/4'-12UN	1-3/4'-12UN
ECW-100	100	377	1068	170	335	140	670	557	250	350	Φ57x5 BW	Φ45x5 BW
ECW-150	150	412	1272	250	410	130	820	642	260	380	Φ76x6 BW	Φ57x5 BW
ECW-200	200	462	1348	280	410	130	870	692	290	420	Φ76x6 BW	Φ57x5 BW
ECW-250	250	462	1658	430	565	140	1180	692	290	420	Φ76x6 BW	Φ57x5 BW
ECW-300	300	512	1622	355	535	160	1100	742	330	460	Φ89x6 BW	Φ76x6 BW
ECW-400	400	562	1786	355	580	200	1190	792	360	510	Φ89x6 BW	Φ76x6 BW
ECW-500	500	612	1882	400	615	200	1260	862	400	550	Φ89x6 BW	Φ76x6 BW
ECW-800	800	716	2216	530	745	200	1530	966	460	640	Φ89x6 BW	Φ76x6 BW

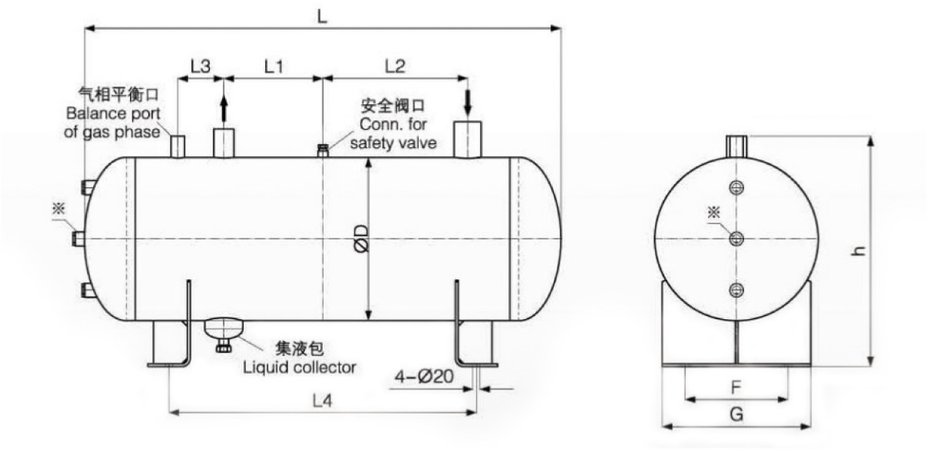

请联系致运获取其他规格型号的技术参数。
Please contact ZHIYUN for technical parameters of other models.

制冷配件
Refrigeration Parts



膨胀阀
Expansion Valve

冲霜阀
Defrosting Valve



电磁阀
Solenoid Valve

球阀
Ball Valve

单向阀,截止阀
Check Valve / Shut Off Valve

视液镜
Sight Glass



避震管
Vibration Resistant Hose



过滤器
Dry Filter

保温管
Thermal Insulation Pipe



铜管
Copper Pipe



铜配件
Copper Fittings



库灯
LED Light





风幕机
Air Curtain





PVC门帘
Curtain



压力表
Pressure Gauge





压力控制器
Pressure Controller





冷冻油
Refrigerant



制冷剂
Refrigerant



油分离器
Oil Seperator



气分离器
Accumulator



油冷却器
Oil Cooler



虹吸罐
Siphon Tank



发电机
Generator



变压器
Transformer



冷库货架
Cold Room Racking System

制冷工具
Refrigeration Tools



真空泵
Vaccum Pump



回收机
Recovery Unit



冷媒电子秤
Refrigerant Scale



表阀
Manifold Gauges



冷媒管
Refrigerant Tube



加液阀
Charging Valve



扩管器
Flaring Tool



弯管器
Bending Tool



胀管器
Tube Expander



割刀
Tube Cutter











检测仪器
HVAC Instrument